ZETAPOWER



INSTALLATION, OPERATION & MAINTENANCE MANUAL OF

Inspiration-TPH10K
Inspiration-DC3000
V0

DISCLAIMER

Copyright © Shenzhen zetara power system Co.,Ltd.2024. All rights reserved.

No part of this document may be reproduced or transmitted in any form or by any means without prior written consent of Shenzhen zetara power system Co.,Ltd.

The material furnished in this document is believed to be accurate and reliable. The information and recommendations in this document do not constitute commitments or warranties in the form of assignments. The information in this document is subject to change without notice. You may refer to the ZETARA Cloud Platform (https://cloud.zetarapower.com) for the most updated version.

All company and brand products and service names are trademarks or registered trademarks of their respective holders.

COPYRIGHT STATEMENT

This manual is under the copyright of Shenzhen zetara power system Co.,Ltd. with all rights reserved. Please keep the manual properly and operate in strict accordance with all safety and operating instructions in this manual. Please do not operate the product before reading through the manual.

TABLE OF CONTENTS

01 INTRODUCTION 01

1.1 Content and structure of this document
1.2 Target group
1.3 Levels of warning messages
1.4 Definition of abbreviations and nouns

02 SAFETY 02

2.1 Intended use
2.2 Safety instructions for battery
2.2.1 General safety precautions
2.2.2 Response to emergency situations
2.3 Important safety instructions
2.4 Symbols explanation

03 PRODUCT INTRODUCTION AND APPLICATION SCENARIOS 06

3.1 Nomenclature introduction
3.2 System introduction
3.3 Product description
3.3.1 Inverter electrical interface introduction
3.3.2 Inverter display interface introduction
3.3.2.1 Main interface of the inverter LCD
3.3.2.2 Display content of sub-menu status item
3.3.2.3 Display content of sub-menu history item
3.3.2.4 Display content of general setting item
3.3.2.5 Display content of parallel setting item
3.3.2.6 Overloaded state
3.3.3 Battery introduction
3.4 Application scenarios

04 STORAGE AND TRANSPORT 15

4.1 Storage
4.1.1 Inverter storage
4.1.2 Battery storage
4.2 Transport

05 MOUNTING 16

5.1 Checking the outer packing
5.2 Scope of delivery
5.2.1 Scope of delivery for inverter installation
5.2.2 Scope of delivery for wall bracket installation(optional)
5.2.3 Scope of delivery for battery Inspiration-DC3000 installation
5.2.4 Scope of delivery for battery BW-BAT-4.8S installation

5.3 Requirements for mounting
5.3.1 Basic requirements
5.3.2 Mounting environment requirements
5.3.3 Mounting structure requirements
5.3.4 Mounting angle and stack requirement
5.3.5 Mounting space requirements
5.4 Preparing tools and instruments
5.5 Mounting the product
5.5.1 Mounting the battery
5.5.2 Mounting the inverter

06 ELECTRICAL CONNECTION 27

6.1 Cable requirements for connection
6.2 Connecting additional grounding
6.3 AC connection
6.3.1 Requirements for the AC connection
6.3.2 Grid and backup connection
6.3.3 Electricity meter connection
6.3.4 Configuring the chint meter
6.4 PV connection
6.5 Electrical connection between the inverter and battery packs
6.5.1 Electrical connection between the inverter and battery
6.5.2 Electrical connection between batteries
6.5.3 AUX/LAN/DRM、RRCR/Meter/RS485/BMS connection

07 INSTALLER ACCOUNT REGISTER AND INSTALL NEW SYSTEM 38

7.1 Register on app
7.1.1 Download and install app
7.1.2 Register as installer account
7.1.3 Overview of functions for installer account
7.1.4 Install new system
7.2.Register on cloud
7.2.1 Register as installer account
7.2.2 Install new system

08 POWERING ON AND OFF THE SYSTEM 43

8.1 Powering on the system
8.2 Powering off the system

09 COMMISSIONING 44

9.1 Checking before power-on
9.2 Mount the cover

9.2.1.Mounting the right cover and cable cover

9.3 Mount the Wi-Fi module
9.4 Wi-Fi module configuration and app usage
9.4.1 Wi-Fi configuration instruction guide
9.4.2 Check the running state
9.4.3 Install a new system
9.4.4 Check the running state online

10 PARALLEL SETUP 51

10.1 Inverters Operation in Parallel Mounting
10.2 Scope of Delivery
10.3 Electrical Connection
10.3.1 AC Wiring to Grid Combiner Cabinet
10.3.2 Verify the Electrical Connection
10.4 Commissioning
10.4.1 System Upgrade
10.4.2 Set the parallel function
10.5 Power ON and OFF the Three Phase Parallel System

11 MAINTENANCE AND TROUBLESHOOTING 53

11.1 Routine maintenance
11.2 Troubleshooting
11.2.1 Inverter error troubleshooting
11.2.2 Battery protection troubleshooting
11.2.3 Battery error troubleshooting

12 UNINSTALLATION & RETURN 59

12.1 Removing the product
12.2 Packing the product
12.3 Disposing of the product

13 SPECIFICATION 59

13.1 Datasheet of inverter
13.2 Datasheet of battery

14 CONTACT US 68

01 INTRODUCTION

1.1. Content and structure of this document

This document is valid for:
Inverter: Inspiration-TPH10K
Battery: Inspiration-DC3000
This document describes the mounting, installation, commissioning, configuration, operation of the product as well as the operation of the product user interface.
Read this document through, understand the safety information, and get familiar with the functions and features of the device before installing and operating it.
Illustrations in this document are reduced to the essential information and may deviate from the real product.
You will find the latest version of this document and further information on the product in PDF format at www.zetarapower.com.

1.2. Target group

This document is intended for qualified persons and end users. Only qualified persons are allowed to perform the operations marked with a warning symbol in this document. Tasks that do not require any specific qualifications will not be marked and can be performed by the end user. Qualified persons must have.

- Knowledge of working principle of inverters.
- Knowledge of how to deal with the dangers and risks associated with installing and using electrical devices, batteries and systems.
- Knowledge of the installation and commissioning of electrical devices and systems.
- Knowledge of the applicable standards and directives.
- Understood and complied with this document, including all safety precautions.
- Understood and complied with the documents of the battery manufacturer, including all safety precautions.

1.3. Levels of warning messages

The following levels of warning messages may occur when handling the product

Symbol	Description
⚠ DANGER	DANGER indicates a hazardous situation which, if not avoided, will result in death or serious injury.
⚠ WARNING	WARNING indicates a hazardous situation which, if not avoided, could result in death or serious injury.
⚠ CAUTION	CAUTION indicates a hazardous situation which, if not avoided, could result in minor or moderate injury.
NOTICE	NOTICE indicates a situation which, if not avoided, can result in property damage.
INFORMATION provides tips which are valuable for the optimal installation and operation of the product.	

1.4. Definition of abbreviations and nouns

AC	alternating current	AUX	auxiliary
APP	application	EMS	energy management system

BAT	battery	INV	inverter
BMS	battery management system	MPPT	maximum power point tracking
DC	direct current	PV	photovoltaic

02 SAFETY

2.1. Intended use

The inverter, battery packs and the electricity meters make up a system for optimization of self-consumption for a household. The inverter can achieve bidirectional transfer between AC current and DC current. The battery pack is used for the energy storage.
This system is suitable for indoor and outdoor installation.
Inverter must only be operated with PV arrays of protection class II in accordance with IEC 61730, application class A. The PV modules must be compatible with this product.
PV modules with a high capacity to ground must only be used if their coupling capacity does not exceed 1.0 µF.
All components must operate in a scenario suitable for their operation.
Be sure to use this product in accordance with the information provided in the accompanying documents and local applicable standards and directives. Any other operation may cause personal injury or property damage.
Alterations to the product, e.g. changes or modifications, are only permitted with the express written permission of zetara. Unauthorized alterations will void guarantee and warranty claims. Zetara shall not be held liable for any damage caused by such changes.
Any use of the product other than that described in the Intended Use section does not qualify as appropriate.
The enclosed documentation is an integral part of this product. Keep the documentation in a convenient place for future reference and comply with all instructions contained therein.
The type label must remain permanently attached to the product.

2.2. Safety instructions for battery

2.2.1. General safety precautions

- Over voltage or wrong wiring can damage the battery pack and cause deflagration, which can be extremely dangerous.
- All types of breakdown of the battery may lead to a leakage of electrolyte or flammable gas.
- Battery pack is not user-serviceable. There is high voltage in the device.
- Read the label with Warning Symbols and Precautions, which is on the right side of the battery pack.
- Do not connect any AC conductors or PV conductors directly to the battery pack which should be only connected to the inverter.
- Do not charge or discharge damaged battery.
- Do not damage the battery pack in such ways as dropping, deforming, impacting, cutting or penetrating with a sharp object. It may cause a leakage of electrolyte or fire.
- Do not expose battery to open flame.

2.2.2. Response to emergency situations

The battery pack is composed of multiple batteries and designed to prevent the danger caused by malfunction.
If the user touches the inner material of the battery cells due to damage to the shell, the following actions are recommended.

1. Inhalation: Leave the contaminated area immediately and seek medical attention.
2. Eye injuries: Rinse eyes with running water for 15 minutes and seek medical attention.
3. Skin injuries: Wash the contacted area with soap thoroughly and seek medical attention.
4. Ingestion: Induce vomiting and seek medical attention.

If a fire breaks out in the place where the battery pack is installed, perform the following counter-measures:

- Fire extinguishing media

1. Respirator is not required during normal operations.
2. Use FM-200 or CO_2 extinguisher for battery fire.
3. Use an ABC fire extinguisher, if the fire is not from battery and not spread to it yet.

- Firefighting instructions

1. If fire occurs when charging batteries, if it is safe to do so, disconnect the battery pack circuit breaker to shut off the power to charge.
2. If the battery pack is not on fire yet, extinguish the fire before the battery pack catches fire.
3. If the battery pack is on fire, do not try to extinguish but evacuate people immediately.

⚠ WARNING	There may be a possible explosion when batteries are heated above 150°C.When the battery pack is burning, it leaks poisonous gases. Do not approach.

- Effective ways to deal with accidents

1. On land: Place damaged battery into a segregated place and call local fire department or service engineer.
2. In water: Stay out of the water and don't touch anything if any part of the battery, inverter, or wiring is submerged.
3. Do not use submerged battery again and contact the service engineer.

2.3. Important safety instructions

⚠ DANGER	Danger to life due to electric shock when live components or cables are touched.

There is high voltage in the conductive components or cables of the product. Touching live parts and cables can result in death or lethal injuries due to electric shock.

- Do not touch non-insulated parts or cables.
- Disconnect the product from voltage sources and make sure it cannot be reconnected before working on the inverter or the battery pack.
- After disconnection, wait for 5 minutes until the capacitors have discharged.
- Do not open the product.
- Wear suitable personal protective equipment for all operations on the product.

⚠ DANGER	Danger to life due to danger voltages on the battery pack.

There is danger voltage at the pin connector for the power cable. Reaching into the pin connector for the power cable can result in lethal electric shock.

- Do not open the battery pack.
- Do not wipe over the battery pack with a damp cloth.
- Leave the protective caps on the pin connectors for the batteries power connection until the inverter cables are connected to the battery pack.
- Disconnect the system from voltage sources and make sure it cannot be reconnected before working on the inverter or the battery pack.

⚠ WARNING	Risk of chemical burns from electrolyte or toxic gases.

During normal operation, no electrolyte would leak from the battery pack and no toxic gases would form. Despite careful construction, if the battery pack is damaged or a fault occurs, it is possible that electrolyte may be leaked or toxic gases may form.

- Store the battery pack in a cool and dry place.
- Do not drop the battery pack or damage it with sharp objects.
- Only set the battery pack down on its back or its bottom.

- Do not open the battery pack.
- Do not install or operate the battery pack in potentially explosive atmosphere or areas of high humidity.
- If moisture has penetrated the battery pack (e.g. due to a damaged housing), do not install or operate the battery pack.
- In case of contact with electrolyte, rinse the affected areas immediately with water and consult a doctor without delay.

⚠ CAUTION Risk of burns due to hot heatsink and housing.

The heatsink and housing can get hot during operation.
During operation, do not touch any parts other than the cover of the inverter.

NOTICE Damage to the inverter due to electrostatic discharge.

- Touching electronic components can cause damage to or destroy the inverter through electrostatic discharge.
- Ground yourself before touching any component.

NOTICE Damage due to cleaning agents.

- The use of cleaning agents may cause damage to the product and its components.
- Clean the product and all its components only with a cloth moistened with clear water.

⚠ DANGER Danger to life due to electric shock when live components or PV cables are touched.

When PV panels exposed to sunlight, the PV array generates high DC voltage which presents in the DC conductors. Touching the live DC cables can result in death or lethal injuries due to electric shock.
- Disconnect the inverter from voltage sources and make sure it cannot be reconnected before working on the device.
- Do not touch non-insulated parts or cables.
- Do not disconnect the DC connectors under load.
- Wear suitable personal protective equipment for all work on the inverter.

⚠ DANGER Danger to life due to electric shock from touching an ungrounded PV module or array frame.

- Touching ungrounded PV modules or array frames can result in death or lethal injuries due to electric shock.
- Connect and ground the frame of the PV modules, the array frame and the electrically conductive surfaces so that there is continuous conduction.
- Observe the applicable local regulations.

⚠ DANGER Danger to life due to electric shock when touching live system components in case of a ground fault.

When a ground fault occurs, parts of the system may still be live. Touching live parts and cables can result in death or lethal injuries due to electric shock.
- Disconnect the product from voltage sources and make sure it cannot be reconnected before working on the device.
- Touch the cables of the PV array on the insulation only.
- Do not touch any parts of the substructure or frame of the PV array.
- Do not connect PV strings with ground faults to the inverter.

2.4. Symbols explanation

Symbol	Explanation
	Beware of a danger zone This symbol indicates that the product must be additionally grounded if additional grounding or equipotential bonding is required at the installation site.
	Beware of electrical voltage The product operates at high voltages.

	Beware of hot surface The product can get hot during operation.
	Danger to life due to high voltages in the inverter, observe a waiting time of 5 minutes. Prior to performing any work on the inverter, dis-connect it from all voltage sources as described in this document.
	WEEE designation Do not dispose of the product together with the household waste but in accordance with the disposal regulations for electronic waste applicable at the installation site.
	Observe the documentation.
	CE marking The product complies with the requirements of the applicable EU directives.
	Certified safety The product is TUV-tested and complies with the requirements of the EU Equipment and Product Safety Act.
the battery 	RCM (Regulatory Compliance Mark) The product complies with the requirements of the applicable Australian standards.
	UKCA marking The product complies with the regulations of the applicable laws of England, Wales and Scotland.
	RoHS labeling The product complies with the requirements of the applicable EU directives.
	Risk of chemical burns.
	Risk of explosion.
	Risk of electrolyte leakage.
	Refer to the instruction for operation.
	Use eye protection.
	Fire, naked light and smoking prohibited.
	No nearing.

	Do not dispose of the battery pack together with the household waste but in accordance with the locally applicable disposal regulations for batteries.
	Recycling code.
UN38.3	Marking for transport of dangerous goods The product passes the certifications of the UN38.3.

03 PRODUCT INTRODUCTION AND APPLICATION SCENARIOS

3.1. Nomenclature introduction

Name	Designation in this document
Inspiration-TPH10K	10kW Three-Phase Hybrid Inverter
Inspiration-DC3000	Battery

3.2. System introduction

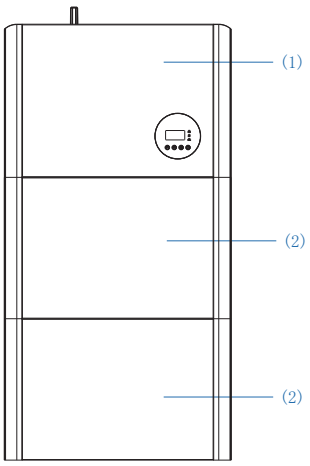

Inspiration-DC3000

Inspiration-DC3000
Dimension(W×H×D)：660X420X170mm

Object	Name	Explain
1	Inspiration-TPH10K	Inverter
2	Inspiration-DC3000	Battery

3.3. Product description

3.3.1. Inverter electrical interface introduction

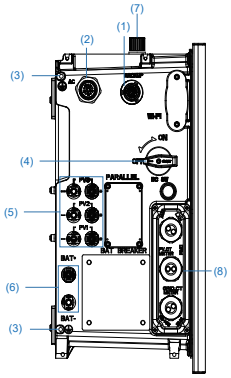

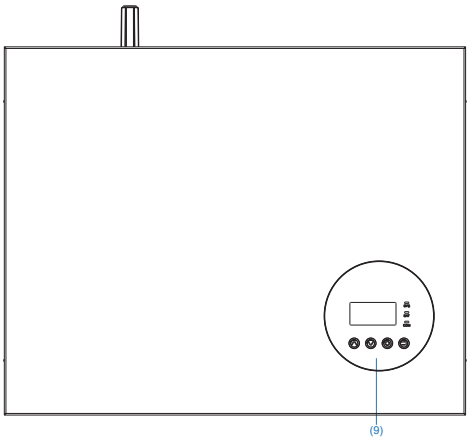

Position	Designation
1	Backup Connector
2	Grid Connector
3	Grounding Point
4	PV Switch
5	PV Connectors
6	BAT Connectors
7	Wi-Fi Port
8	Communication Ports(CAN/RS485,BMS, LAN, METER, DRM**, AUX)
9	LCD Display

*All breakers of the product are switched off when shipped.
**The DRM is only for regions with AS/NZS 4777.2 safety regulations.

3.3.2. Inverter display interface introduction

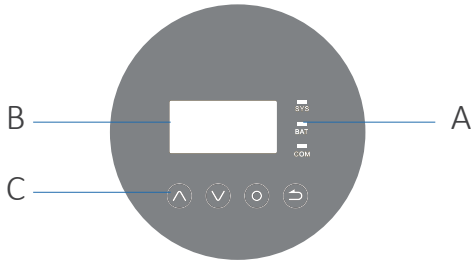

Object	Name	Description
A	SYS LED	Red: The inverter is in fault.
		White: The inverter is in normal state.
	BAT LED	White: The battery is in charging or discharging.
	COM LED	White: The inverter is in communication.
B	LCD Dispaly	Display the information of the energy storage system.
C	Button Function	Escape from current interface or function.
		Move cursor to upside or increase value.
		Move cursor to downside or decrease value.
		Confirm the selection.

3.3.2.1 Main interface of the inverter LCD

Power 0W Total 00.0kWh Battery % Normal	Main displays the inverter working status and information, including: 1.Power: Current PV power. 2.Total: Total power generation. 3.Battery: Current remaining battery power (SOC). 4.Normal: Current working state of the equipment, including Standby.
>>>> MENU <<<< >Status History Setting	In the Main interface, press ENT key to enter the menu's main interface. Use the up and down key to select a sub-menu, press the ENT key to enter the selected sub-menu, press Return key to return to the previous layer.

3.3.2.2 Display content of sub-menu status item

>>>> Status <<<< >Grid Soalr Battery	Status menu contains five sub-menus: Solar, Battery, Grid, UPS and Comm. These display the relevant information about the current physical or communication interface respectively.

>>>> Grid <<<< >U1 230.2V I1 2.0A F1 49.99Hz	Grid interface displays the real-time information on the utility grid side: voltage U1, current I1, frequency F1, PInv, PMeter AC, PMeter DC.
>>>> Grid <<<< >U2 230.2V I2 2.0A F2 49.99Hz	Grid interface displays the real-time information on the utility grid side: voltage U2, current I2, frequency F2, PInv, PMeter AC, PMeter DC.
>>>> Grid <<<< >U3 230.2V I3 2.0A F3 49.99Hz	Grid interface displays the real-time information on the utility grid side: voltage U3, current I3, frequency F3, PInv, PMeter AC, PMeter DC.
>>>> Solar <<<< >U1 360.0V I1 1.0A P1 360W	Solar interface displays the real-time information of PV side: voltage U1, current I1, power P1.
>>>> Solar <<<< >U2 360.0V I2 1.0A P2 360W	Solar interface displays the real-time information of PV side: voltage U2, current I2 and power P2.
>>>> Solar <<<< >U3 360.0V I3 1.0A P3 360W	Solar interface displays the real-time information of PV side: voltage U3, current I3 and power P3.
>>>> Battery <<<< >U 96.0V I 10.0A P 960W	Battery interface displays the real-time information of battery side: voltage U, current I, power P, residual capacity of Battery (SOC), the internal environmental temperature Temp.
>>>> UPS <<<< >U1 230.2V I1 2.0A P1 460W	UPS interface displays the real-time information in this mode: voltage U1, current I1, power P1, frequency F.
>>>> UPS <<<< >U2 230.2V I2 2.0A P2 460W	UPS interface displays the real-time information in this mode: voltage U2, current I2, power P2, frequency F.
>>>> UPS <<<< >U3 230.2V I3 2.0A P3 460W	UPS interface displays the real-time information in this mode: voltage U3, current I3, power P3, frequency F.

>>>> Comm <<<< >BMS Yes Net Yes MeterGrid Yes	Communication interface displays the real-time communication situation of BMS, Net, MeterGrid and MeterDC.

3.3.2.3 Display content of sub-menu history item

>>>> History <<<< >Grid Consump INV Gen. BAT Gen.	History menu contains seven sub-menus: Grid Consumption, INV Gen., BAT Gen., PV Gen., Grid Charge., PV Charge., Error Logs.
> Grid CONSUMP < > Total: 0.0kWh	Grid Consumption interface displays today's or total load consumption from grid.
>>> INV Gen. <<< >Today: 29.1kWh	INV Gen. interface displays today's or total electricity quantity generated from Inverter.
>>> Bat Gen. <<< >Today: 13.8kWh	Bat Gen. interface displays today's or total electricity quantity discharged from the battery.
>>> PV Gen. <<< >Today: 19.0kWh	PV Gen. interface displays today's or total electricity quantity generated from the PV-panels.
>>> Grid Charge <<< >Today: 1.9kWh	Grid Charge interface displays today's or total electricity quantity battery charging from the grid.
>>> PV Charge <<< >Today: 13.1kWh	PV Charge interface displays today's or total electricity quantity battery charging from the PV-panels.
>>> Error Logs <<< 1: 2018-02-02 16:48 Chg SPI Fault	Error Logs interface displays the 10 latest fault records of this device, including the name of the fault and time of error.
>> Information < >SN: xxxxxxxxxxxxxx	Make sure all numbers in the information menu are correct.

>> Information << >Inverter Ver.:	Check the inverter software version.

3.3.2.4 Display content of general setting item

> New Password < > 0 0 0 0	Step1: Click setting and enter the password. The installation's password is a four-digits password: 1111, after four-digits password was correctly input, you can enter into the main Setting interface (administrator permissions).	
>>> Setting <<< >Function Safety	>>> Function <<< >Solar Battery Grid	>>> Solar <<< >On Grid Cap. 000000W
Step2: Click Function to enter function setting.	Step3: Click Solar to set the Solar relevant information.	Step4: Set on-grid capacity, storage capacity and number of PV strings (MPPT number).
>>>> Battery <<<< >Bat Model ZETARA	>>>> Battery <<<< >SOC Calibration No	>>>> Battery <<<< >Battery Ready No
Step5: Click the Battery Function and check battery type.	Step6: Check SOC Calibration function set No.	Step7: Check the Battery Ready function set No. If you only use the inverter without battery, please set it Yes.
>>>> Grid <<<< >FeedIN Control Power Limit Power Factor	Max. Feed in rate >User Value 50%	>> System Mode << >DC AC Hybrid
Step8: Click the Grid Function to set up relevant parameters of the grid.	Step9: Set the Max. Feed in rate value.	Step10: Click Function-System Mode to set system mode: DC, AC, Hybrid.
>>> Work Mode <<< >Force Charge Enable	>>> Work Mode <<< >Force Charge Enable	>>> Work Mode <<< > Charge Start Time 1 01:00
Step11: Click the mode then set up work mode.(self-use or force time charge)	Step12: If you want to use force charge, sett Enable here.	Step13: Set the charge and discharge time.

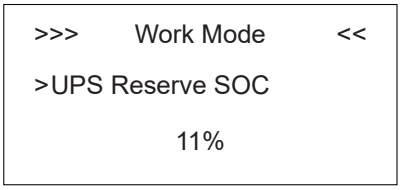

Step14: Set the UPS Reserve SOC, it means how much battery energy to reserve for UPS function.



Step15: Click Safety in the setting menu. Set safety standard.For example: AS4777 for Australia, VDE4105 for Germany, CEI0_21 for Italy, G83_2 for Great Britain, NRS097_2_1 for South Africa, RD1699 for Spain, VDE0216 for 60Hz countries.

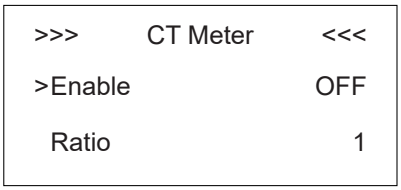

Step16: If you use CT meter, please set CT meter enable and the relevant ratio.

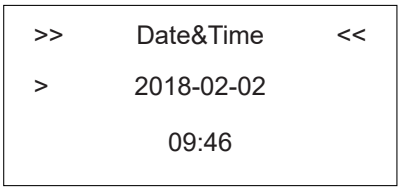

Step17: Click System in the setting menu. Click Date &Time and set up the date and time.

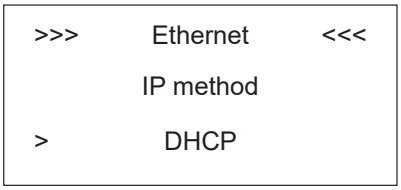

Step18: Click Ethernet to set the IP address.
DHCP mode means that setup IP address is set up automatically.
If you want to set up the IP address manually, please choose manual mode.

Note:
It is needed to set the following 3 parameters for manual mode:
IP Address: IP address;
Subnet Mask: Subnet mask;
Default Gateway: Default gateway;
Automatic display one parameter: MAC Address: display MAC Address.

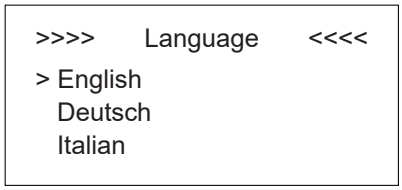

Step19: Click Language to set Language Date & Time Setting Interface.

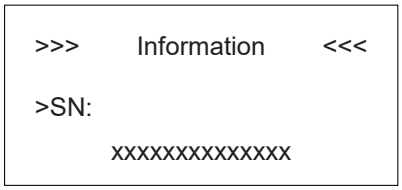

Step20: Make sure all the following number is correct.
Date & Time Setting Interface.

3.3.2.5 Display content of parallel setting item

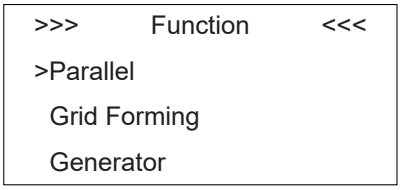

Step1: Click Parallel to enter parallel setting.

<table>
<tr><td colspan="2">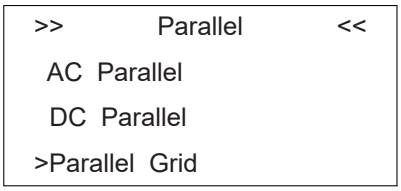
</td><td>Step2: Click Parallel Grid to set the Parallel Grid relevant information.</td></tr>
<tr><td rowspan="3">Step3:</td><td>
</td><td>(1):Click the Single to set the inverter to run on a single machine.</td></tr>
<tr><td>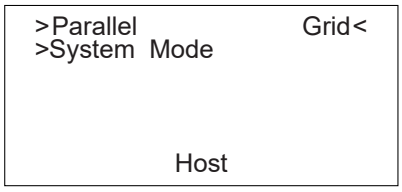
</td><td>(2): Click the Host to set the Host inverter.</td></tr>
<tr><td>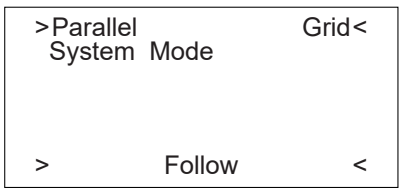
</td><td>(3): Click the Follow to set the Follow inverter.</td></tr>
</table>

3.3.2.6 Overloaded state

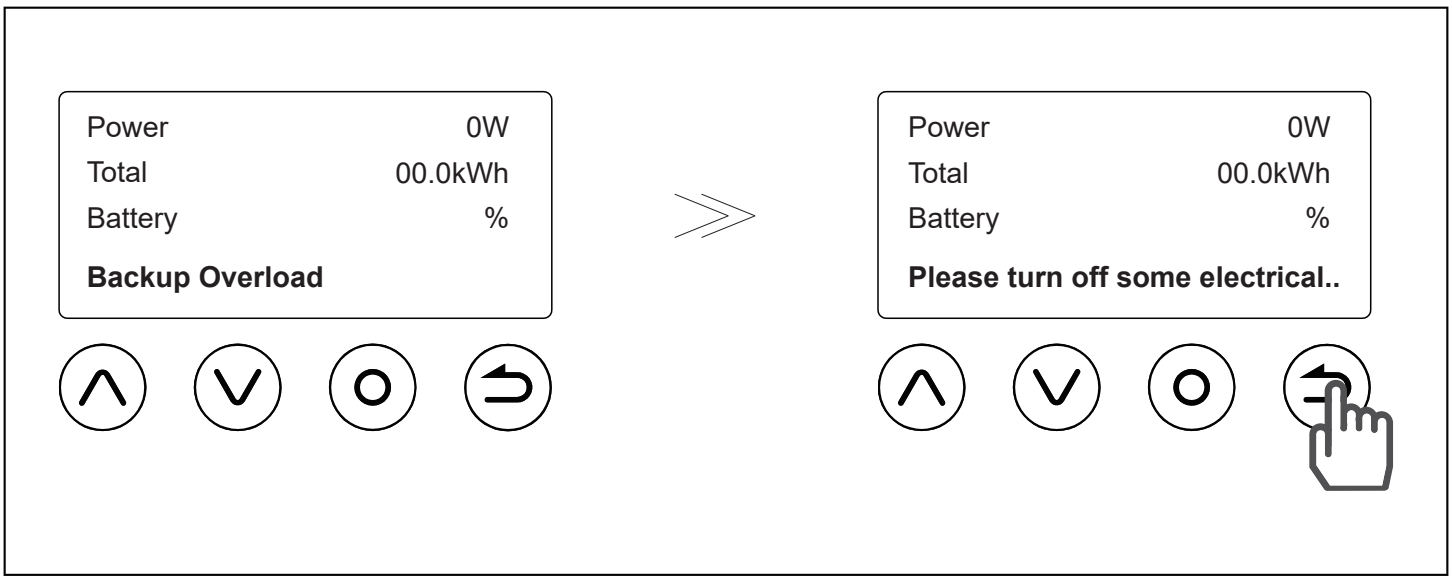

When overloaded, the display show "over load" and scrolls to prompt the customer to reduce some electrical appliances like this "Please turn off some electrical appliances and press the exit button to resume".

3.3.3. Battery introduction

Battery pack appearance and dimensions of Inspiration-DC3000.

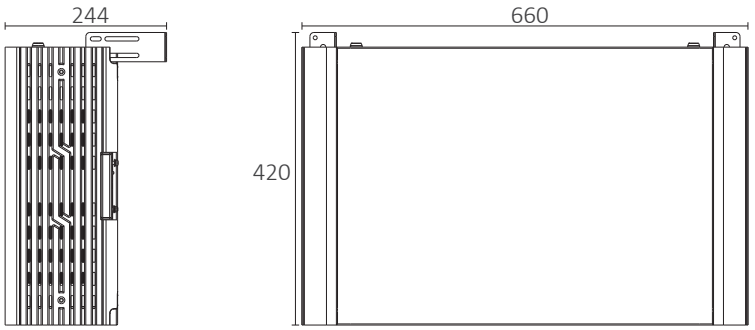

Inspiration-DC3000

Connection area overview of Inspiration-DC3000

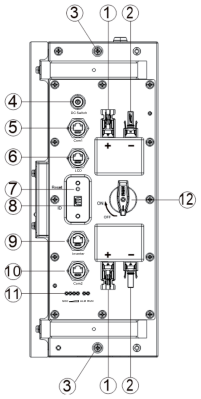

Position	Designation
1	Battery positive
2	Battery negative
3	GND Ground point
4	Power On/off switch
5	Communication port
6	LCD Communication port
7	ID Reset button
8	Battery address
9	Inverter Communication port
10	Communication port
11	Battery SOC and status
12	Output ON/OFF

3.4. Application scenarios

Storage System (includes inverter Inspiration-TPH4K/Inspiration-TPH5K/Inspiration-TPH6K/ Inspiration-TPH8K/Inspiration-TPH10K and battery Inspiration-DC3000/BW-BAT-4.8S) can be applied in DC-coupled systems (mostly new installation), AC-coupled systems (mostly retrofit), Hybrid-coupled systems (mostly retrofit, and increase the PV capacity), and Off-grid (with Generator) systems as the following schemes show:

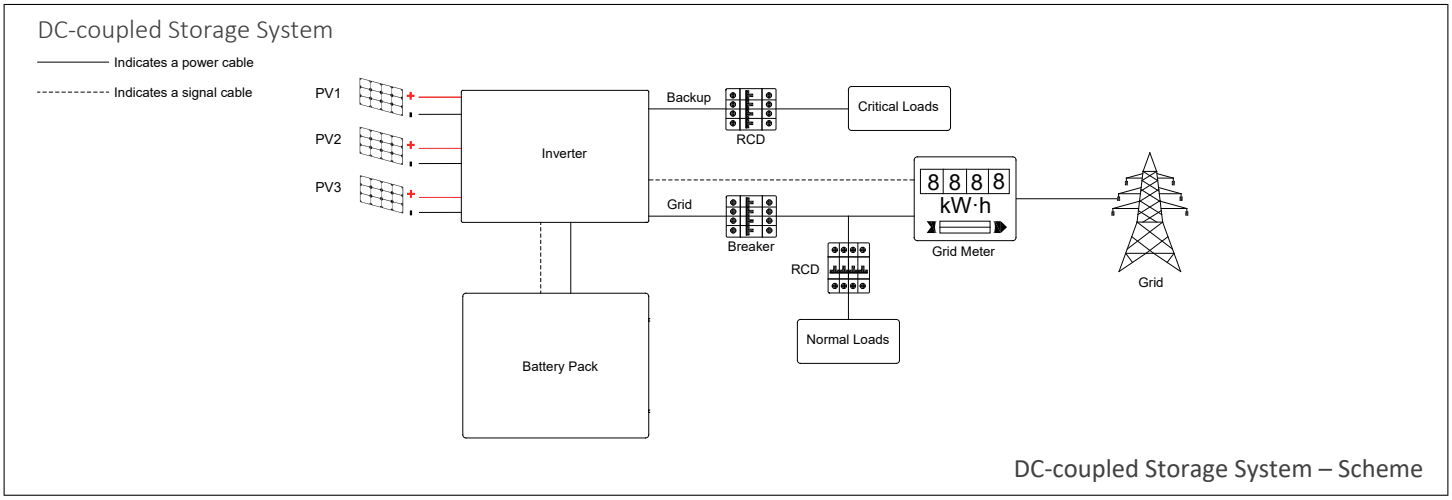

DC-coupled Storage System – Scheme

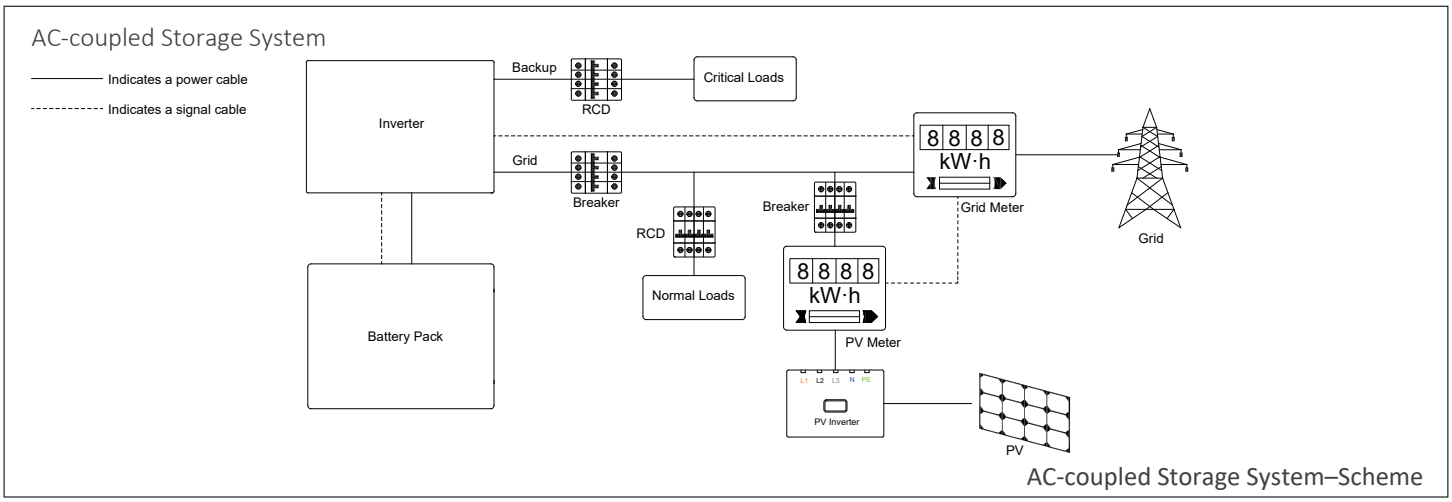

AC-coupled Storage System–Scheme

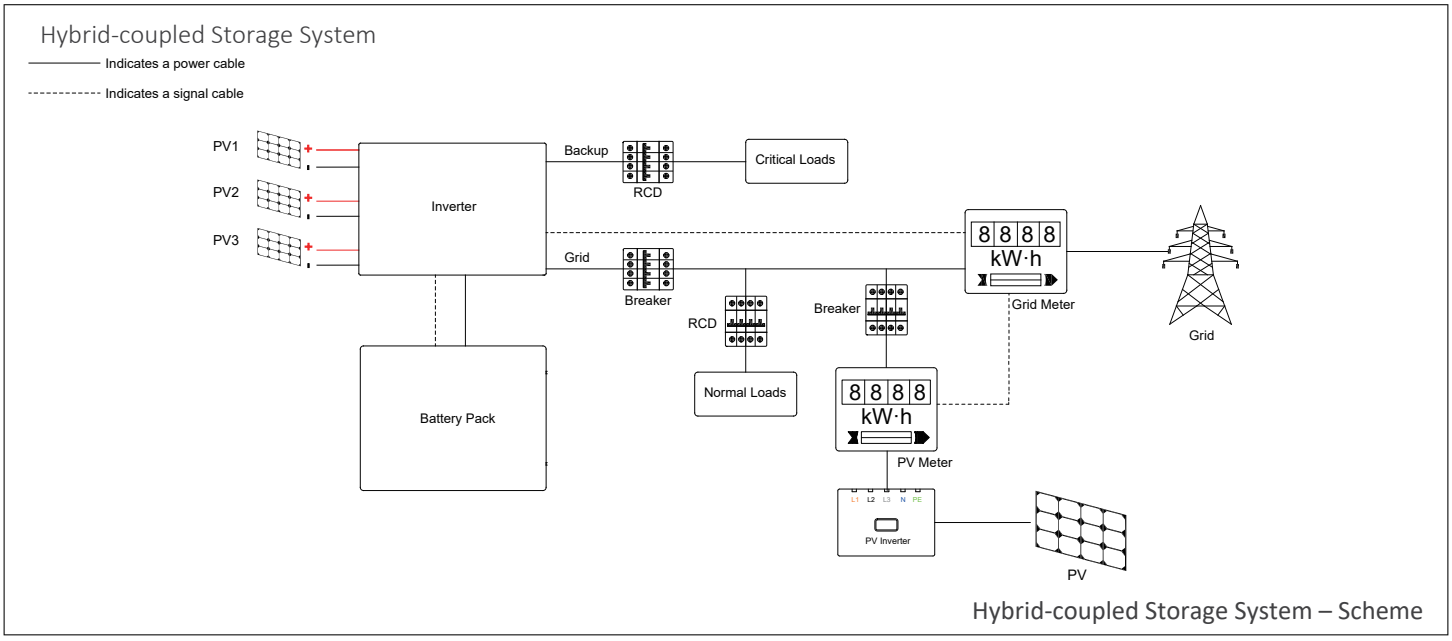

Hybrid-coupled Storage System – Scheme

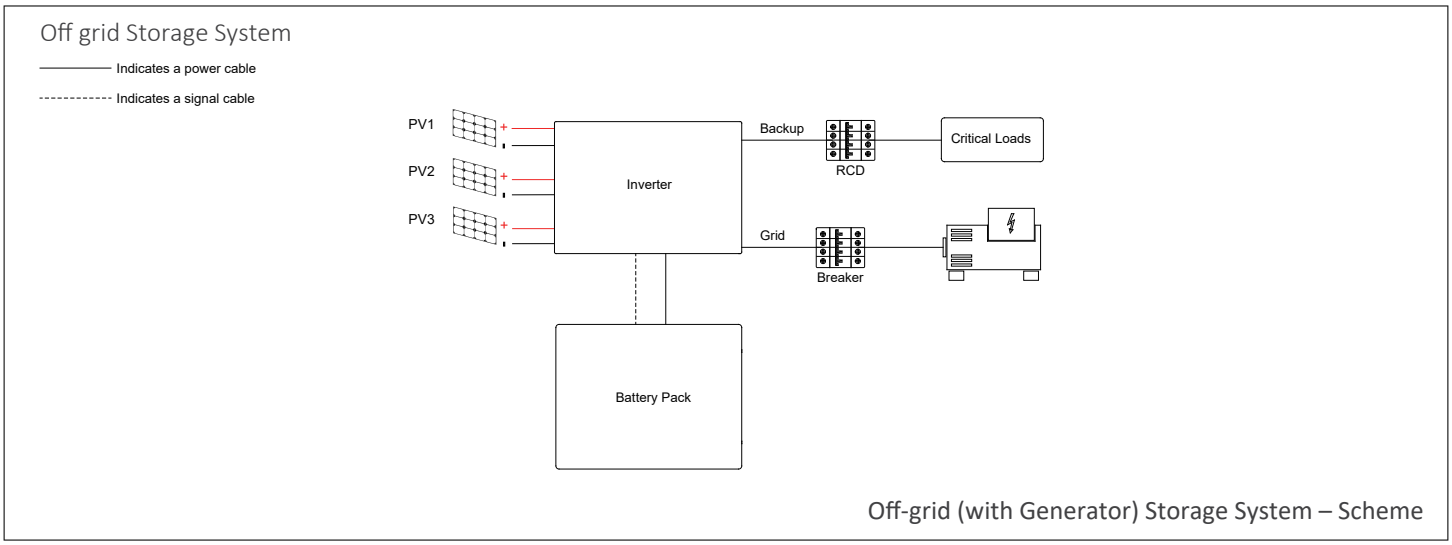

Off-grid (with Generator) Storage System – Scheme

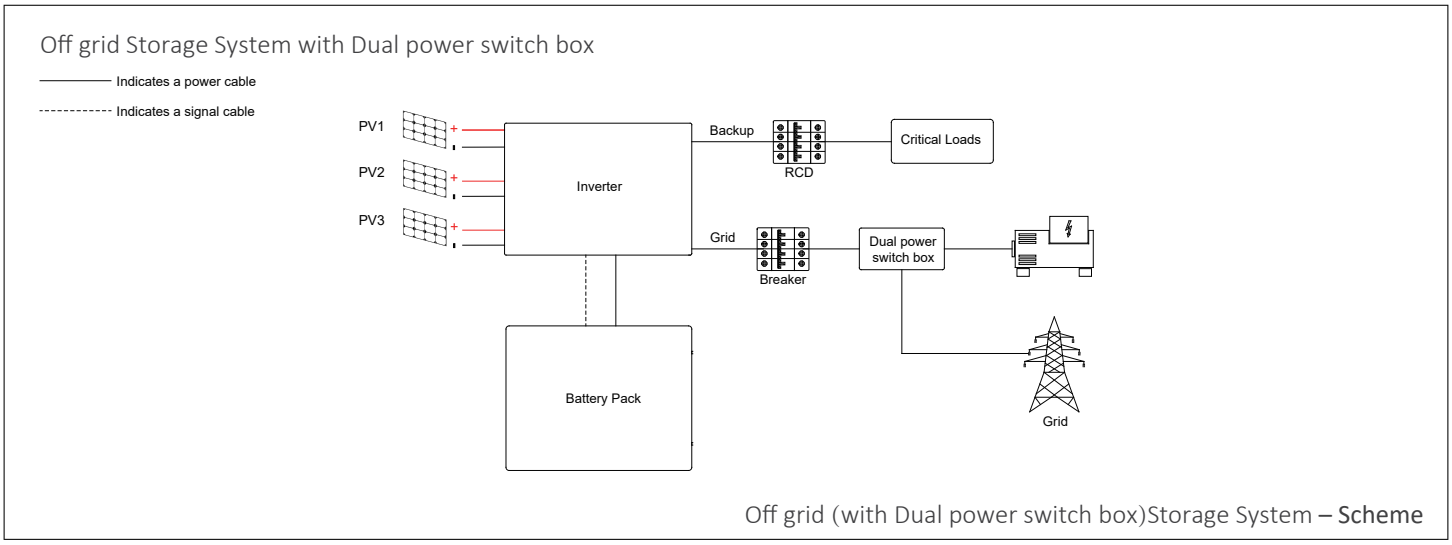

Off grid (with Dual power switch box)Storage System – Scheme

04 STORAGE AND TRANSPORT

4.1. Storage

4.1.1. Inverter storage

The following requirements should be met if the inverter is not put into use directly:

1. Do not unpack the inverter.
2. Keep the storage temperature at -40~60°C and the humidity at 5%~95% RH.

3. The inverter should be stored in a clean and dry place and be protected from dust and water vapor corrosion.
4. A maximum of six inverters can be stacked. To avoid personal injury or device damage, stack inverters with caution to prevent them from falling over.
5. During the storage period, check the inverter periodically. Replace the packing materials which are damaged by insects or rodents in a timely manner.
6. If the inverters have been stored for more than two years, it must be checked and tested by professionals before being put into use.

4.1.2. Battery storage

The following requirements should be met if the battery is not put into use directly:

1. Place batteries according to the signs on the packing case during storage. Do not put batteries upside down or sidelong.
2. Stack battery packing cases by complying with the stacking requirements on the external package.
3. Store the battery pack out of reach of children and animals.
4. Store the battery pack where it should be minimal dust and dirt in the area.
5. Handle batteries with caution to avoid damage.
6. The storage environment requirements are as follows:
   a.Ambient temperature: -10~55°C, recommended storage temperature: 15~30°C.
   b.Relative humidity: 15%~ 85%.
   c.Place batteries in a dry and clean place with proper ventilation.
   d.Place batteries in a place that is away from corrosive organic solvents and gases.
   e.Keep batteries away from direct sunlight.
   f .Keep batteries at least 2m away from heat sources.
7. The batteries in storage must be disconnected from external devices. The indicators (if any) on the batteries should be off.
8. Batteries should be delivered based on the "first in, first out" rule.
9. The warehouse keeper should collect battery storage information every month and periodically report the battery inventory information to the planning department. The batteries that have been stored for nearly 6 months should be recharged timely.
10. If a lithium battery is stored for a long time, capacity loss may occur. After a lithium battery is stored for 12 months in the recommended storage temperature, the irreversible capacity loss rate is 3%~10%. It is recommended that batteries not be stored for a long period. If the batteries need to be stored for more than 6 months, it is recommended to recharge the batteries to 65~75% of the SOC.

4.2. Transport

During transportation, please follow these guidelines:

1. Priority to use the original packaging for transportation. If the original packaging is not available, put the product inside a suitable cardboard box and seal it properly.
2. Handle with care, choose the corresponding handling method according to the weight, and pay attention to safety.
3. During transportation, please keep the packaging away from dangerous sources and take waterproof measures.
4. Please fix the packaging during transportation to prevent falling or mechanical impact.

05 MOUNTING

5.1. Checking the outer packing

Before unpacking the product, check the outer packing for damage, such as holes and cracks. If any damage is found, do not unpack the product and contact your dealer as soon as possible.

5.2. Scope of delivery

Check the scope of delivery for completeness and any externally visible damage.
Contact your distributor if the scope of delivery is incomplete or damaged.

5.2.1. Scope of delivery for inverter installation

Inverter				
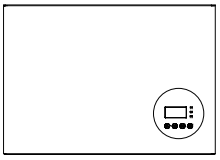	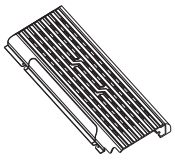	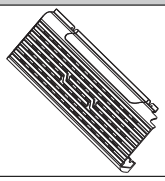	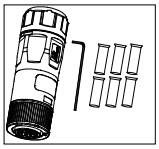	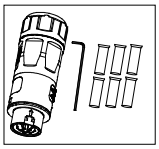
Inverter (X1)	Right Cover (X1)	Left Cover (X1)	Grid Connector(X1)	Backup Connector(X1)
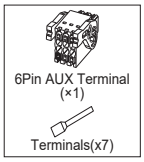				
6 Pin AUX Terminal Block (X2)	PV+ & PV- Connectors (X3)	(INV TO BAT) Communication Network Cable (×1)	(INV TO BAT) Negative Cable (×1)	(INV TO BAT) Positive Cable (×1)
	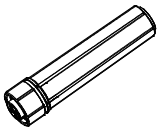	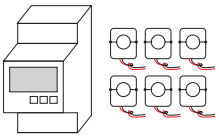	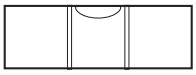	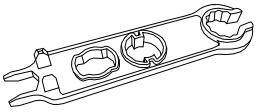
GND Cable (×1)	WiFi Module (X1)	Meter(X1) CT(X6)	Gradienter (×1)	Wrench Tool (X1)
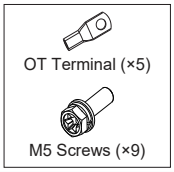	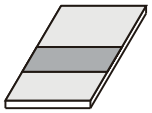	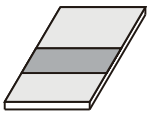	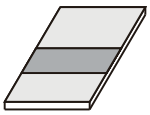	
Screws and Terminals Set (×1)	Commissioning Guide & Report (X1)	Quick Installation Guide (X1)	System Wiring Diagram sheets (X1)	

5.2.2. Scope of delivery for battery Inspiration-DC3000 installation

Battery				
				
Battery Pack (X1)	Plastic Decorative Cover(X2)	Wall Bracket (X2)	Communication network cable(X1)	Positive Cable (X1)
				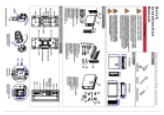
Negative Cable (X1)	GND Cable (X1)	Self-tapping screw (X4)	Plastic expansion sleeve(X4)	Quick Installation Manual(X1)
				
MC4 Connector tool (X1)				

5.2.3. ID Setting Description

Figure 5.2.3 ID dialing code address assignment instructions

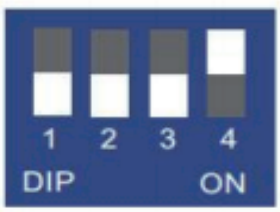

ID:1

ID code bits correspond to binary digits, down represents "ON", up represents "OFF", the right side of the code bit is the low bit, the left side is the high bit.

NOTE: The battery pack ID connected to the hybrid inverter must be set to ID1, indicating that it is the host, other batteries do not need to be set, and the ID1 host will automatically assign an address to the slave.

5.2.4. Module Specification

Inspiration DC3000 stacked vertical batteries are made of lithium iron phosphate battery modules with the highest safety performance. The battery modules are available in 5.12KWh/3KW. The following table describes related parameters.

Table5.2.4 Inspiration DC3000 Specification

Type	Voltage	Power	Energy	Width	Depth	Height	Weight
Inspiration DC3000	400V	3KW	5120Wh	570mm	170mm	420mm	55±2kg

5.2.5. Inspiration DC3000 Illustration and Front Panel Description

Figure 5.2.5. Inspiration DC3000 appearance & dimension drawing

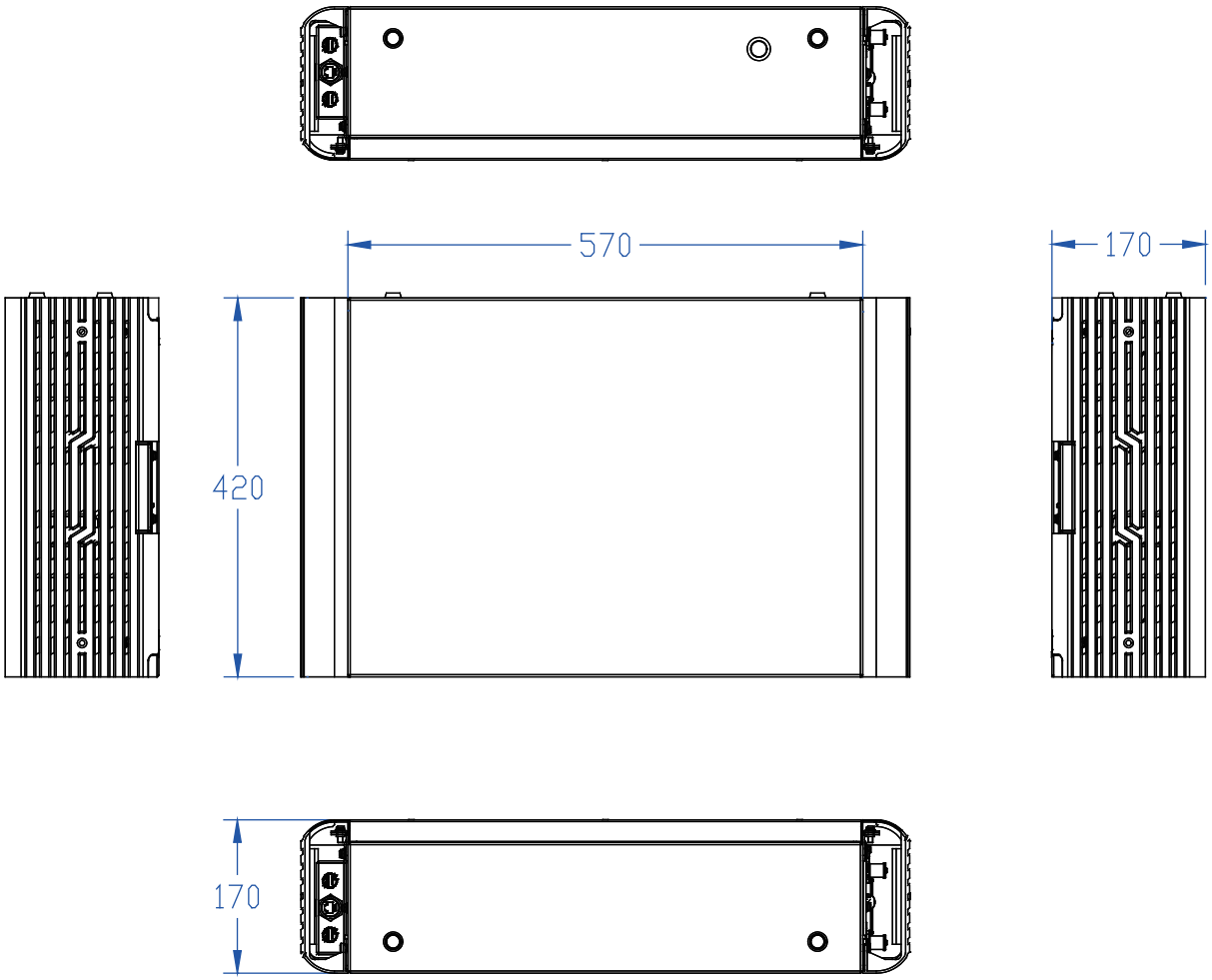

5.3.1. Basic requirements

- The ZETARA Inverter and Battery system is suitable for indoor and outdoor use.
- Do not install the inverter in a place where a person can easily touch it because its housing and heatsink are hot during operation.
- Do not mount the system in areas with flammable or explosive materials.
- Do not mount the inverter at a place within children's reach.
- Do not mount the system outdoors in salt areas because it will be corroded there and may cause fire. A salt area refers to the region within 500m from the coast or prone to sea breeze. The regions prone to sea breeze vary depending on weather conditions (such as typhoons and monsoons) or terrains (such as dams and hills).

5.3.2. Mounting environment requirements

- The system must be mounted in a well-ventilated environment to ensure good heat dissipation.
- When mounted under direct sunlight, the power of the system may be derated due to additional temperature rise.
- Mount the system in a sheltered place or mount an awning over the product.
- The optimal temperature range for the battery pack to operate is from 15℃ to 30℃.
- Do not expose or place near water sources like downspouts or sprinklers.
- If the battery pack is mounted in the garage, then ensure that it is above the height of the vehicle bumper and/ or door.

5.3.3. Mounting structure requirements

- The mounting structure where the system is mounted must be fireproof.
- Do not mount the system on flammable building materials.
- Ensure that the mounting surface is solid enough to bear the weight load.
- In residential areas, do not mount the inverter on dry walls or walls made of similar materials which have a weak sound insulation performance because the noise generated by the inverter is noticeable.

5.3.4. Mounting angle and stack requirement

The system should be mounted on the wall.
The installation angle requirement is as follow:

- Do not mount the inverter at forward tilted, side tilted, horizontal, or upside down positions.

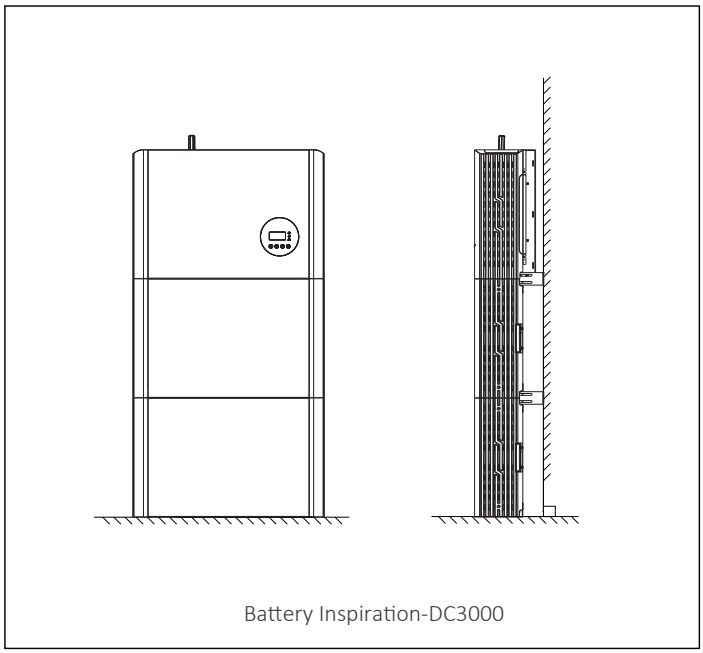

Battery Inspiration-DC3000

5.3.5. Mounting space requirements

- Reserve sufficient clearance around the product to ensure sufficient space for installation, maintenance and heat dissipation.
- The side clearance is a recommendation. Keep the clearance as short as you can if there is no influence to the operation and maintenance.

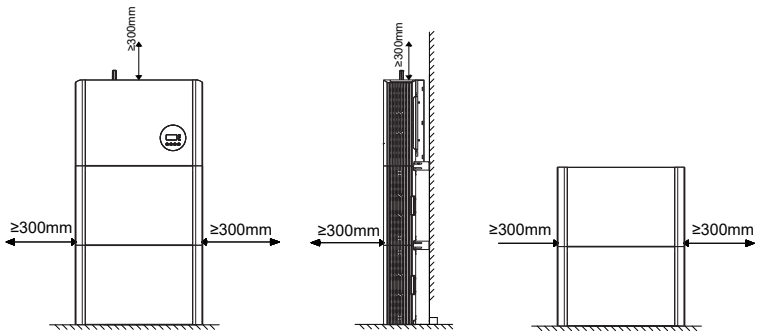

Battery Inspiration-DC3000

5.4. Preparing tools and instruments

Category	Tools and Instruments		
Installation			
	Hammer drill (with a Φ10 mm drill bit)	Torque socket wrench SW10	Multimeter (DC voltage range ≥ 1000 V DC)
	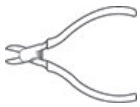	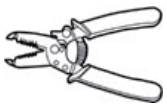	
	Diagonal pliers	Wire stripper	T20 screwdriver(torque range: 0-5 N m)L＜200mm
			
	Rubber mallet	Utility knife	Cable cutter
	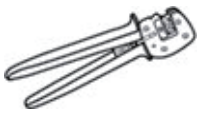		
	Crimping tool (model: PV-CZM-22100)	Cord end terminal crimper	Disassembly and Assembly Tool of PV connector
			
	Vacuum cleaner	Heat shrink tubing	Heat gun

			
	Marker	Measuring tape	Bubble or digital level
Personal Protective Equipment			
	Safety gloves	Safety goggles	Anti-dust respirator
		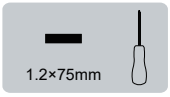	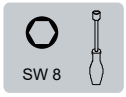
	Safety shoes	Flat-Head Screwdriver	Socket Wrench

5.5. Mounting the product

5.5.1. Mounting the battery

5.5.1.1 Open-box Inspection

Table 5.5.1.1 Unpacking tools sheet

Item	Tools		
Tools	Slotted screwdriver 	Protective gloves 	Stripper 
	Hammer 		

⚠ Inspiration DC3000 products have been strictly tested and tested before leaving the factory. Please sign for them after inspection. If the product is damaged, please contact the local distributor.Please open the box to check: whether the outer packaging is intact or damaged; whether the internal equipment is damaged.

Installation Requirements

The installation position of the battery cabinet has a direct impact on its safety, service life and performance. It should ensure that the wiring of the system is convenient, easy to maintain and operate, and should avoid placing the battery mounting base in a high temperature and high humidity environment. To ensure the flatness of installation floor. As shown in the following figure.

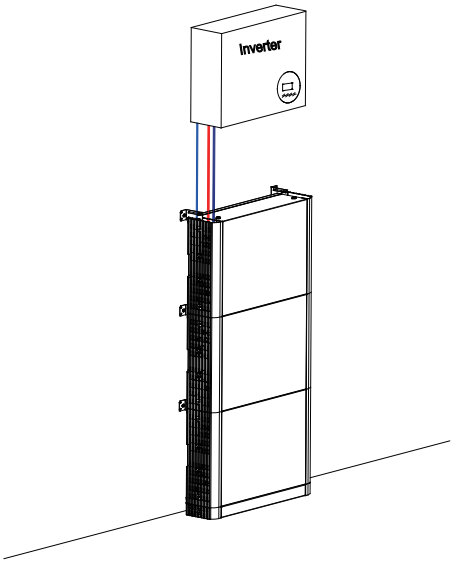

5.5.1.2 Mounting Base Installation

Remove the mounting base from the box and place it on flat ground. Our special construction design eliminates the need for screws to secure the base to the floor.

Figure 5.5.1.2 Mounting Base Installation

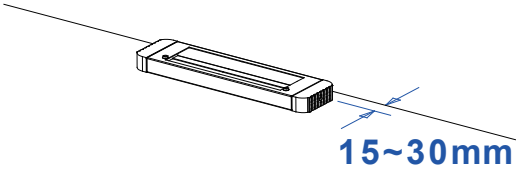

5.5.1.2.2 Battery Module Installation

⚠ According to the actual situation of the installation site, use manual or machine to carry the module; it is recommended that at least two people lift it together and wear anti-smashing shoes and non-slip gloves during installation.

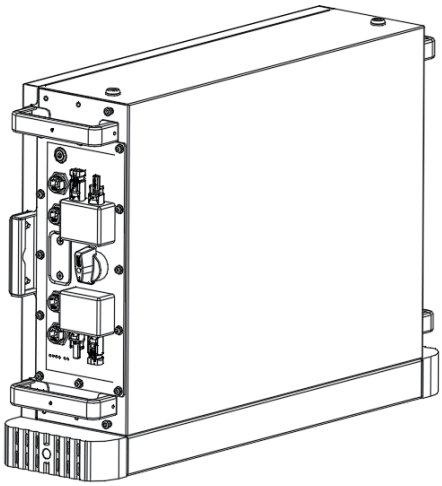

5.5.1.2.3 System Fixed Installation

⚠ Considering that our mounting base adopts non-traditional screw fixing method, so we need to install a fixed mounting ear on the wall to ensure the stability of the battery system .The battery system is at risk of tipping if not handled properly.

Figure 5.5.1.2.3 Mounting lug Installation

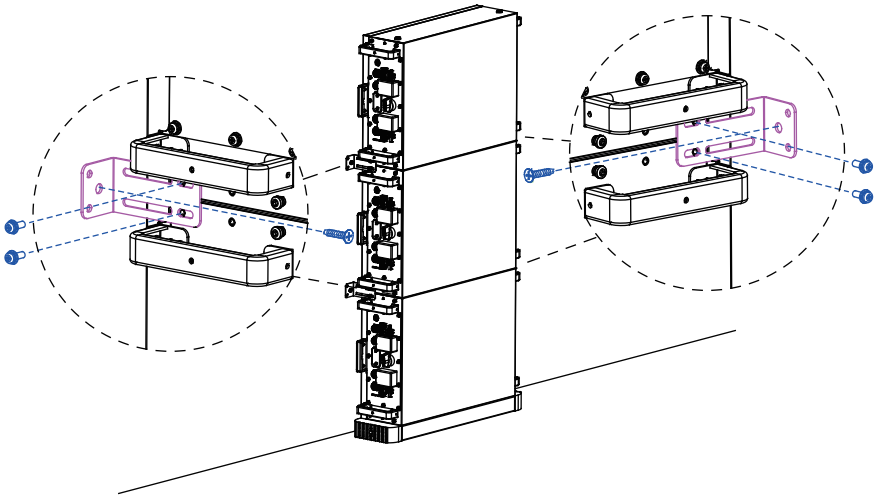

5.5.1.3 Electrical Installation

5.5.1.3.1 Tools Introduction

The following tools are required for electrical connection, as shown in Table 5.5.1.3.1:

Table 5.5.1.3.1Electrical installation tools diagram

Item	工具		
Tools	Multi-meter 	Protective gloves 	Screwdriver 
	Electric batch 	Cross screwdriver 	Socket wrench 

5.5.1.4 Inspiration DC3000 Cable Connection

Figure 5.5.1.4 Inspiration DC3000 system connection schematic

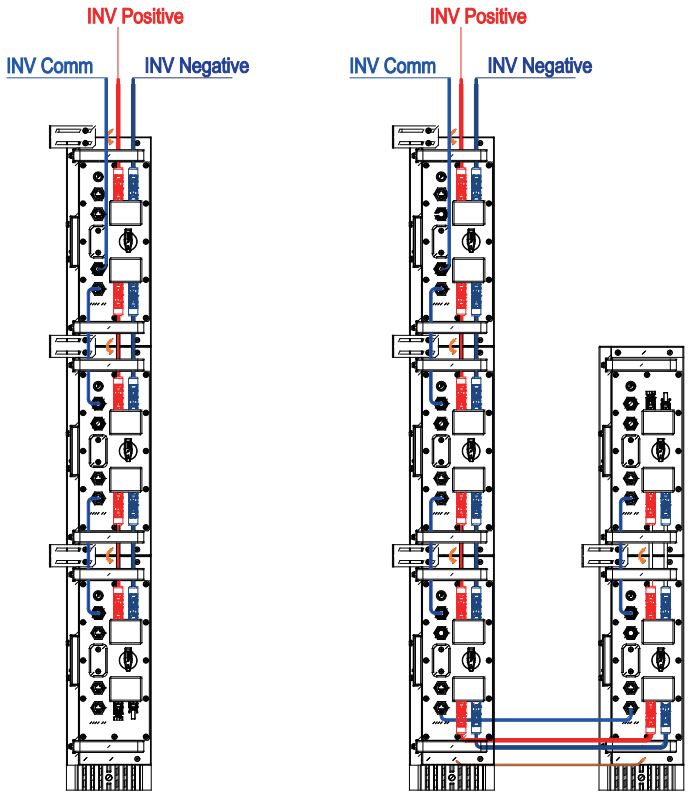

(1) Grounding. One end of the grounding cable(PVC 25mm2) is screwed to the grounding hole at the end of the chassis （M5）, and the other end is connected to the grounding copper strip to ensure a solid connection.

(2) Communication cable installation. Finally, connect the RS485/CAN interface of the No.1 battery to the inverter via communication cable..

(3) Power cable installation. Use the power cable to connect each battery in parallel as the above picture shows. Avoid short circuit and reverse connection of positive and negative terminal.

(4) Connect the equipment. Make sure the battery and device are powered off before connecting. Clearly identify the location of the positive and negative terminals of the system, red to the positive terminal, black to the negative terminal, to ensure no connection errors.

5.5.1.5 Side Panel Installation

After all wiring harnesses are installed (power lines, communication lines), use power tools to complete the side panel installation.

Figure 5.5.1.5 Side panel installation

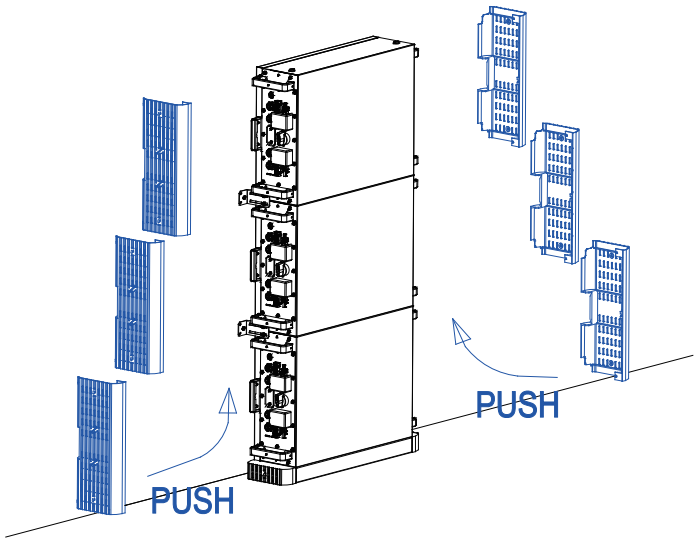

5.5.1.6 System Starting Up

5.5.1.6.1 Start Up Checking

After installation or maintenance, the lithium battery system needs to be started up. Before starting up, please check the following precautions carefully to make sure there are no errors.
All electrical connections must be made in accordance with the electrical diagrams in the manual;
the cables are properly distributed, without mechanical damage, and connected and fastened correctly;
No excess parts or conductive material remains.

5.5.1.6.2 System Turn On

After completing the above steps, press the ON/OFF boat switch on the control panel to turn on the machine, then turn on the miniature circuit breaker and turn on the power of the whole system to complete the installation.

System turns on step:

(1)Double check all cables are connected correctly, and make sure the grounding is proper.
(2)Turn on the switch at inverter's battery side or between inverter and battery.
(3)Turn on the battery system.
(4)Turn on the inverter.

5.5.1.6.3 System Turn off

When failure or before service, must turn off the battery system, the procedure to switch off is:
(1)Switch off the inverter;
(2)Switch off the battery;
(3)Switch off the battery switch between the battery and the inverter if there is any.

5.5.1.6.4 System Charge

When the battery system is transported or stored for a long time, the battery SOC may be low due toself-discharge of the cells and system consumption, and the lithium battery needs to be charged after normal start-up and before use.

5.5.2. Mounting the inverter

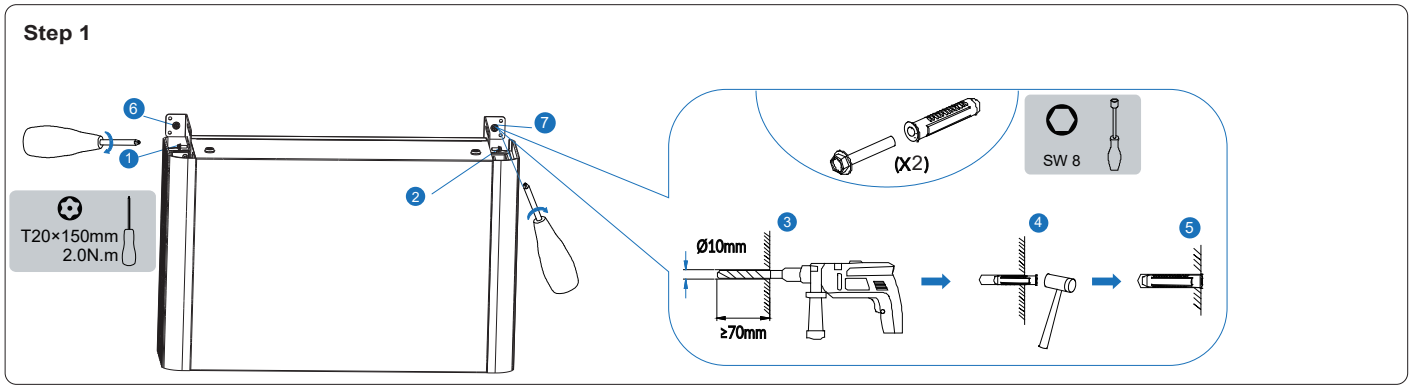

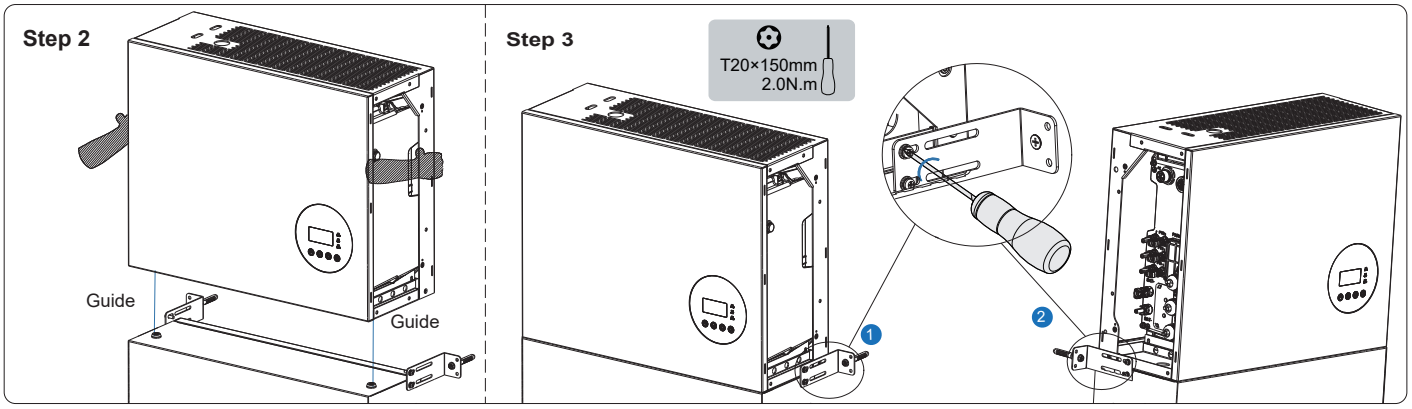

06 ELECTRICAL CONNECTION

Precautions

⚠ DANGER	Before connecting cables, ensure that all breakers of the inverter and the battery packs and all the switches connected to inverters and the battery packs are set to OFF. Otherwise, the danger voltage of the energy storage system may result in electric shocks.
⚠ WARNING	• The energy storage system damage caused by incorrect cable connections is not covered under any warranty. • Only certified electricians are allowed to connect cables. Operation personnel must wear proper PPE when connecting cables
NOTICE	The cable colors shown in the electrical connection diagrams provided in this chapter are for reference only. Select cables in accordance with local cable specifications (green-and-yellow cables are only used for PE).

6.1. Cable requirements for connection

No.	Cable	Type	Conductor Cross Section Area Range	Outer Diameter	Source
1	Battery power cable	Standard PV cable in the industry (reom-mended type:PV1-F)	Inspiration-DC3000: 16mm^2	N/A	Delivered with the battery
2	Battery communica-tion cable	Standard network cable in the industry (recom-mended type: Cat5e, UTP, UV-resistant for outdoor use)	0.12 ～ 0.2 mm^2 (AWG26 ～ AWG24)	N/A	Delivered with the battery
3	PV Power cable	Standard PV cable in the industry (recommended type: PV1-F)	4 ～ 6 mm^2	5.5 ～ 9 mm	Purchased by the installer
4※1	Signal cable	Standard network cable in the industry (recom-mended type: Cat5e, FTP, UV-resistant for outdoor use)	0.12 ～ 0.2 mm^2 (AWG26 ～ AWG24)	N/A	Delivered with the inverter
5※2	Signal cable	Standard network cable in the industry (recom-mended type: Cat5e, FTP, UV-resistant for outdoor use)	0.12 ～ 0.2 mm^2 (AWG26 ～ AWG24)	4 ～ 6 mm	Purchased by the installer
6※3	Signal cable	Multiple-core outdoor shielded twisted pair cable	0.1 ～ 1.3 mm^2	4 ～ 6 mm	Purchased by the installer
7	AC power cable for backup	Three-core (L, N and PE) outdoor copper cable	4 ～ 6 mm^2	13 ～ 17.5 mm	Purchased by the installer
8	AC power cable for grid	Three-core (L, N and PE) outdoor copper cable	4 ～ 6mm^2	13 ～ 17.5 mm	Purchased by the installer
9	PE cable	Single-core outdoor copper cable	6 ～ 10mm^2	N/A	Purchased by the installer

※1 For CT communication connection with inverter.
※2 For CAN/RS485, LAN, Meter, DRM communication connection with inverter.
※3 For AUX communication connection with inverter.

6.2. Connecting additional grounding

NOTICE	Electric Shock Hazard
Before doing electrical connection, please ensure the PV switch & all AC and BAT circuit breakers in the energy storage system are switched OFF and cannot be reactivated.	

External grounding points are provided at the left side of the inverter.
Prepare M5 OT terminals, strip the grounding cable insulation, insert the stripped part of the grounding cable into the ring terminal lug and crimp using a crimping tool.
Connect the OT terminal to grounding point using the torque 2.0 N.m with TX20 screwdriver.

Additional grounding connection for inverter.

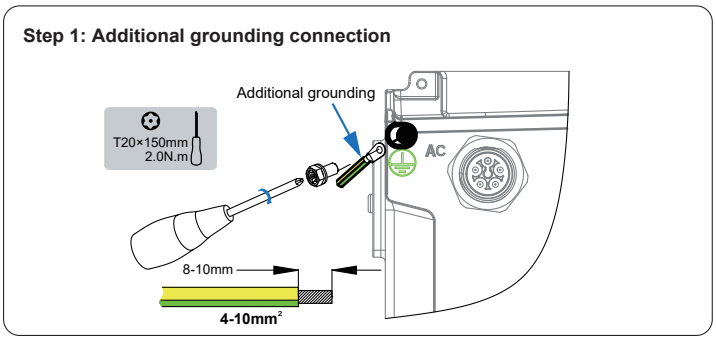

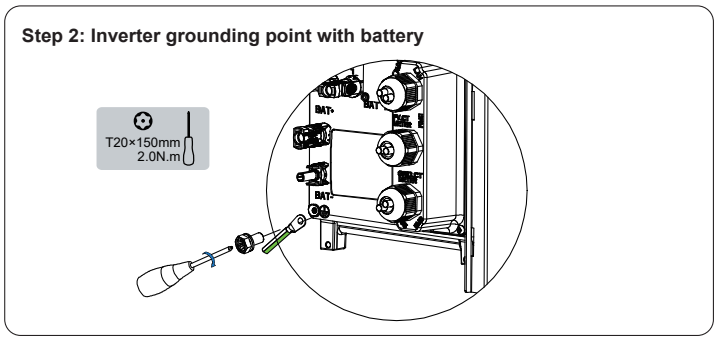

Grounding connection between inverter and battery.

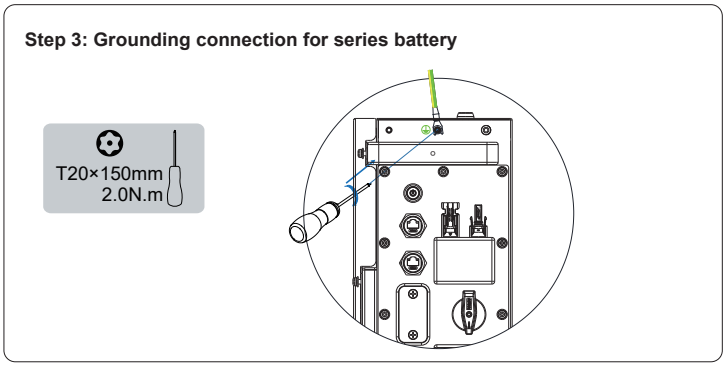

Battery Inspiration-DC3000

6.3. AC connection

6.3.1. Requirements for the AC connection

NOTICE	Residual-current monitoring unit: The inverter does not require an external residual-current device when operating. If local regulations require the use of a residual-current device, or Hybrid-coupled storage system with big coupling capacity from the PV array and PV inverter, the following must be observed: The inverter is compatible with type A residual-current devices with a rated residual current of 100 mA or higher. Each inverter in the system must be connected to the utility grid via a separate residual-current device.
⚠ DANGER	You must protect each inverter with an individual grid/backup circuit breaker in order to ensure that the inverter can be disconnected safely.
NOTICE	For Australia and New Zealand installation site, the neutral cable of grid side and backup side must be connected together, otherwise backup output function will not work.

AC connection recommendation for 4kW			
Description	Max. Current	Breaker Type for 4kW	Recommend cable cross section
Grid Side	11.6A	16A	2.5~6mm²
Backup Side	8.7A	16A	2.5~6mm²

AC connection recommendation for 5kW			
Description	Max. Current	Breaker Type for 5kW	Recommend cable cross section
Grid Side	14.5A	25A	4~6mm²
Backup Side	10.9A	16A	2.5~6mm²

AC connection recommendation for 6kW			
Description	Max. Current	Breaker Type for 6kW	Recommend cable cross section
Grid Side	17.4A	25A	4~6mm²
Backup Side	13.0A	25A	2.5~6mm²

AC connection recommendation for 8kW			
Description	Max. Current	Breaker Type for 8kW	Recommend cable cross section
Grid Side	23.2A	32A	4~6mm²
Backup Side	17.4A	25A	4~6mm²

AC connection recommendation for 10kW			
Description	Max. Current	Breaker Type for 10kW	Recommend cable cross section
Grid Side	29A	40A	6mm²
Backup Side	21.7A	32A	4~6mm²

⚠ WARNING Selecting a circuit breaker and copper conductor cross section

You should use APP or Cloud to do the right setting for example when selecting grid circuit breaker specification 32A or 40A and suitable copper conductor cross section, otherwise it increases the danger of the circuit breaker tripping under normal operating conditions.

6.3.2. Grid and backup connection

The steps for connecting the grid connector as follows:

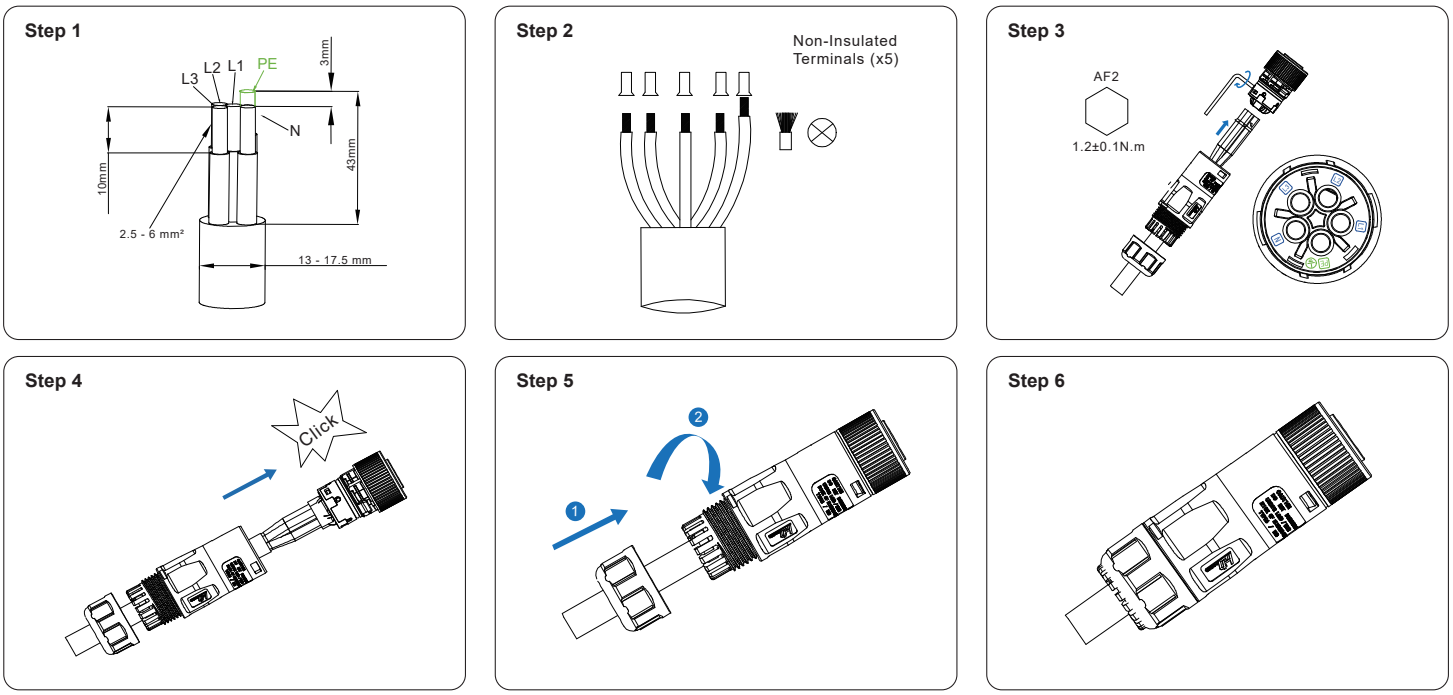

The steps for backup connection are similar as grid connection.

NOTE	Do not install the grid and backup connector on the inverter.

Disassembly the Grid/Backup Connector

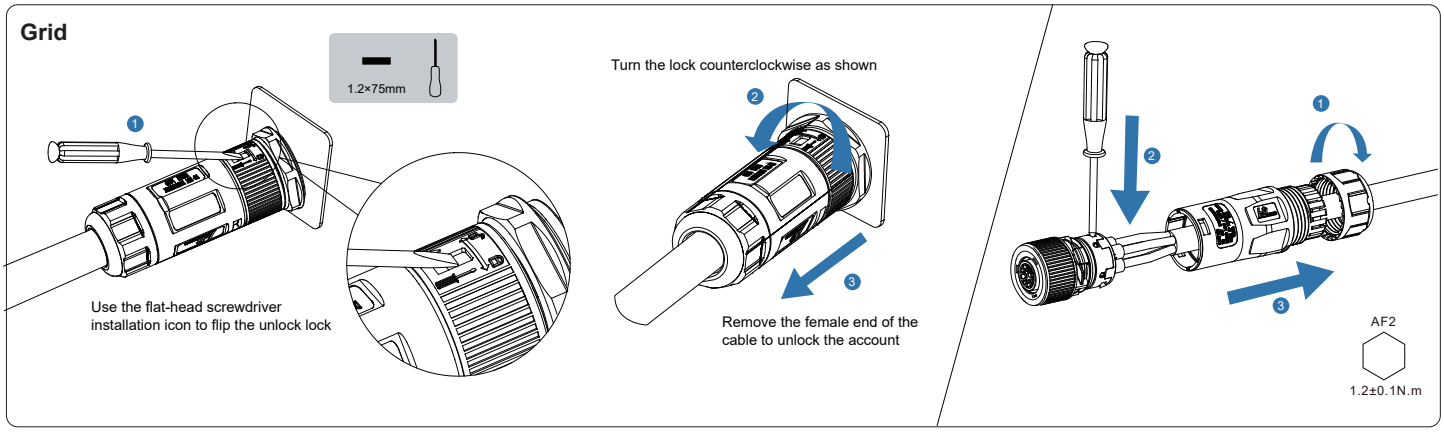

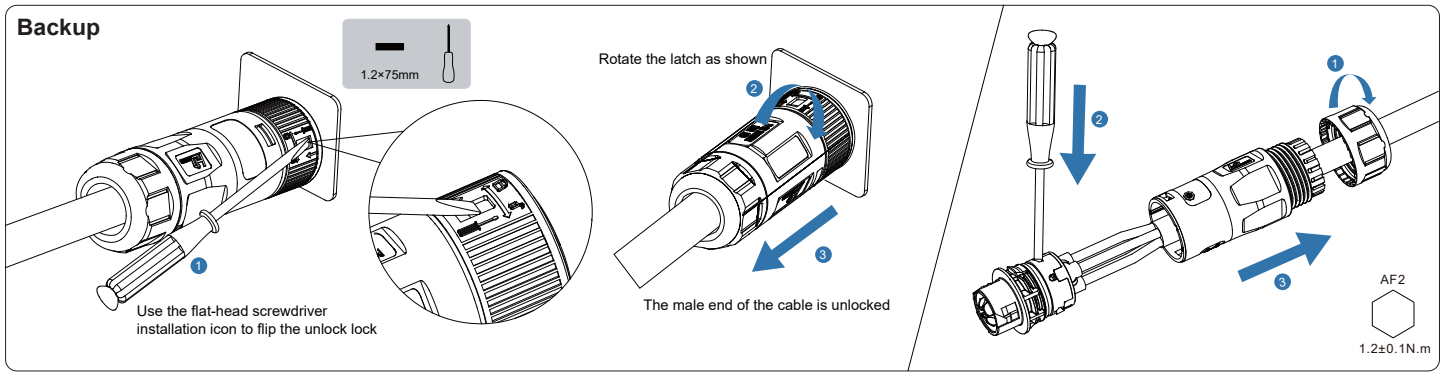

6.3.3. Electricity meter connection

Item	Current	Scenarios
DTSU666-3*230V 5(80)A	65A(a)	Three phase meter (without CT)
DTSU666-3*230V 100A/40mA	100A	Three phase meter (with CT)
DTSU666-3*230V 250A/50mA	250A	Three phase meter (with CT)

(a): Current ≤65A Per phase

Loosen the swivel nuts of the cable glands on the COM connection cover of Inverter, and unscrew the 4 screws on the corners, then you will see the meter communication ports.

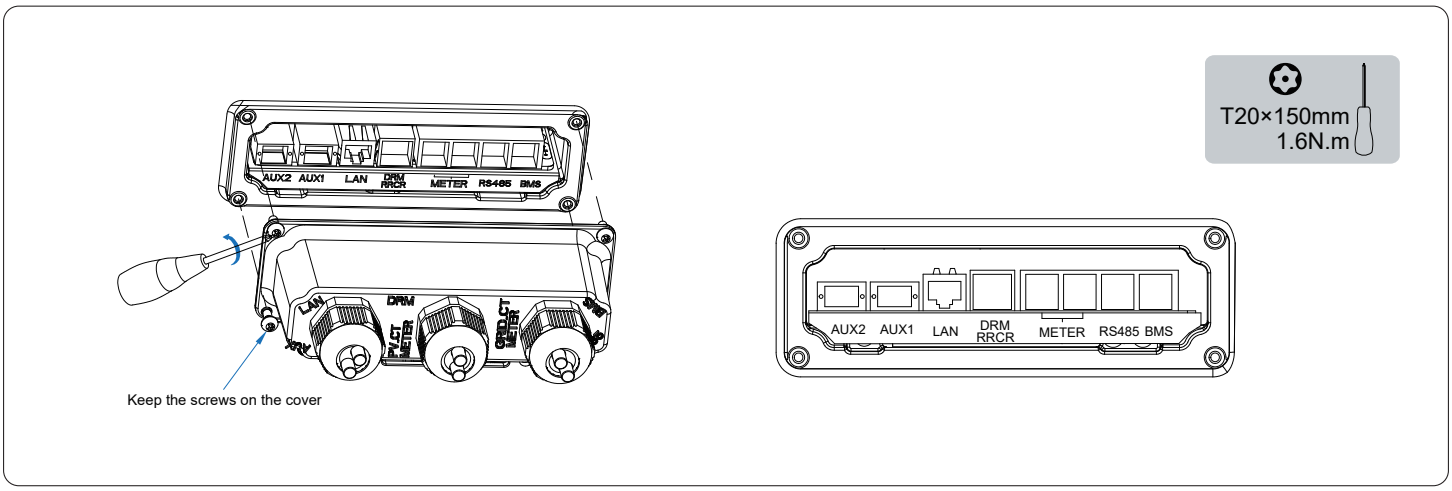

Lead the meter cable through the cable gland of the COM connection cover, don't tighten the swivel nuts of the cable glands.
Insert the RJ45 plugs to the meter communication port.

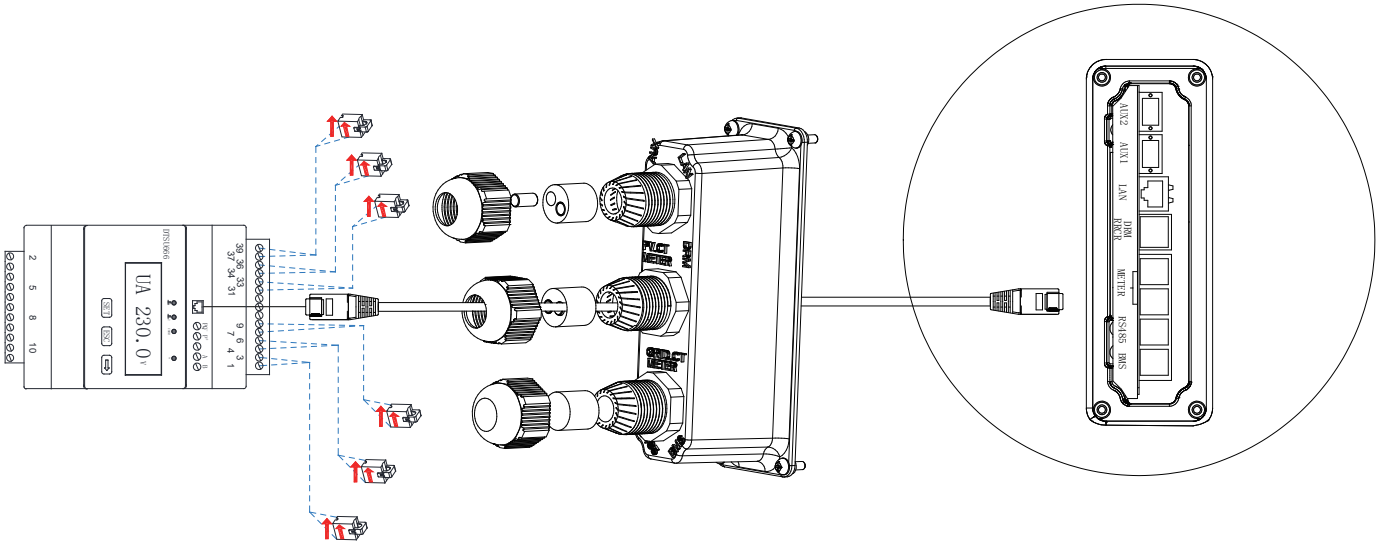

The other steps for meter(without CT) DTSU666-3*230V 5(80)A connection as follows:

Wiring at Three-phase feed in (DC)

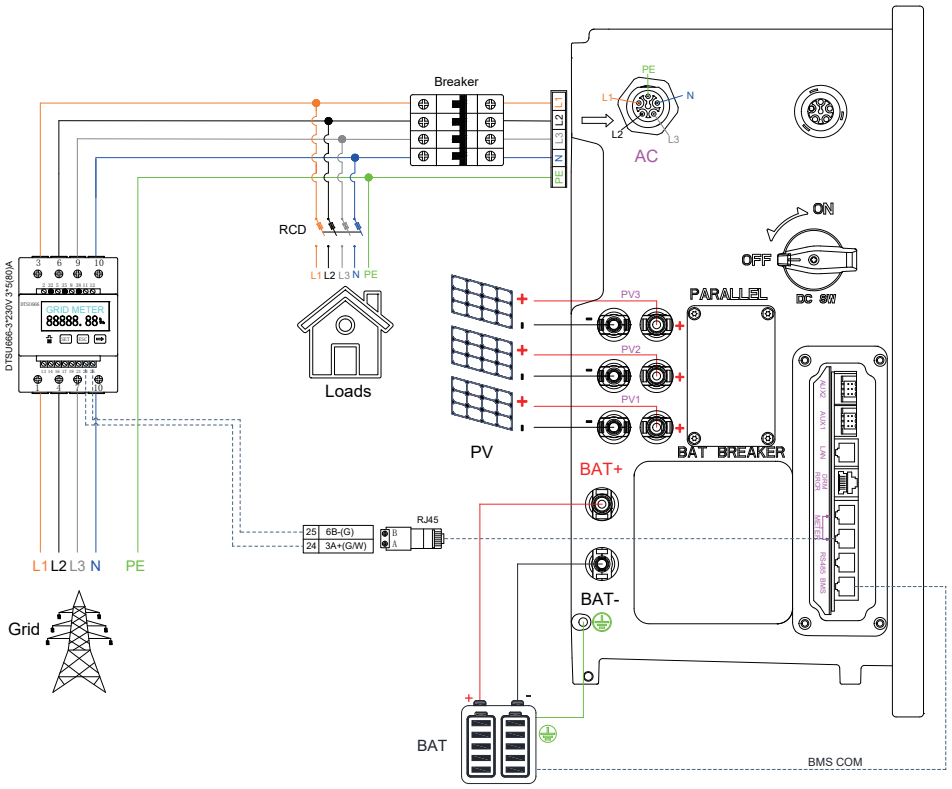

DC-coupled Storage System

Wiring at Three-phase feed in (AC)

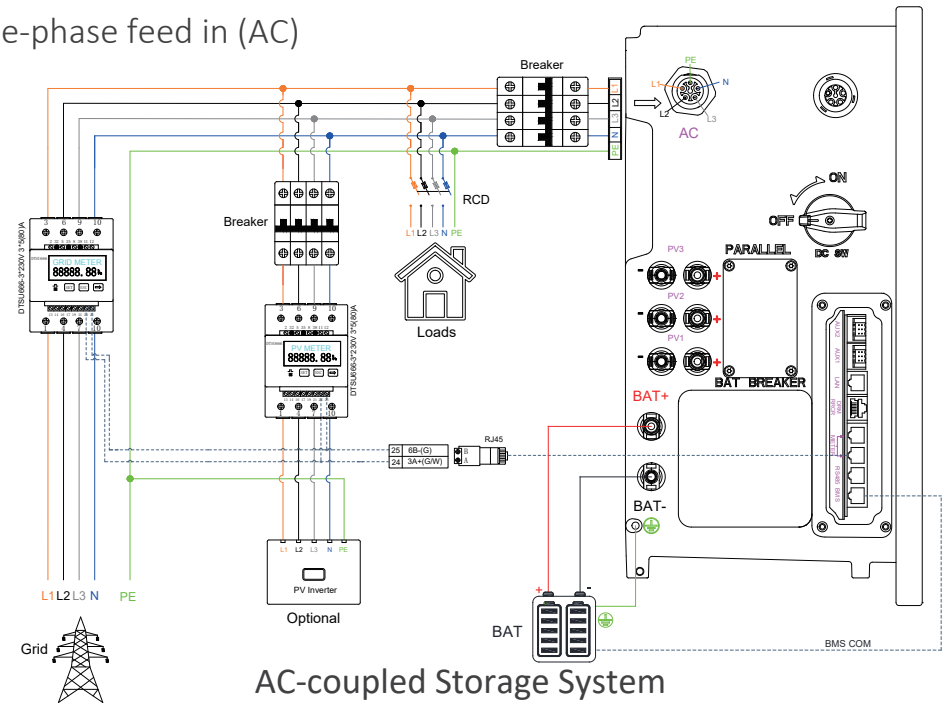

AC-coupled Storage System

Wiring at Three-phase feed in (Hybrid)

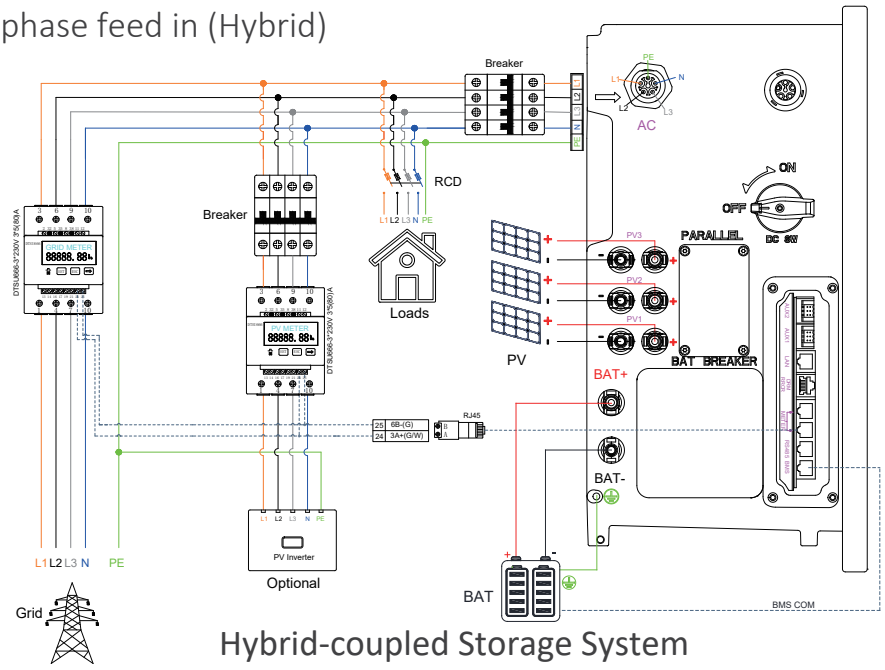

Hybrid-coupled Storage System

6.3.4. Configuring the chint meter

Model	Grid Meter Address	PV Meter Address
DTSU666-3*230V 5(80)A (without CT)	1(default)	2

When the meter is used as Grid meter, please follow the steps below to complete the address setting.

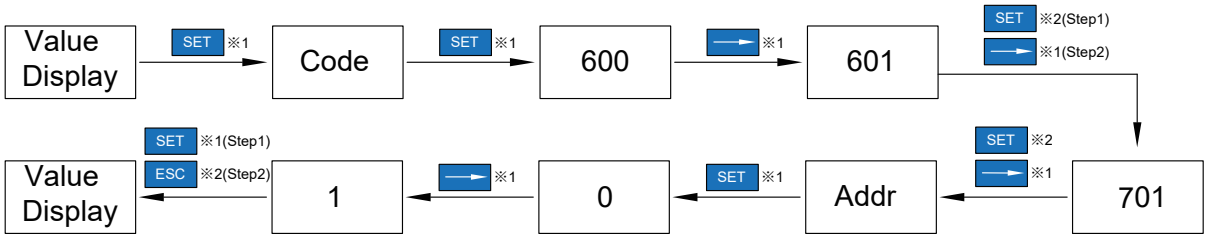

When the meter is used as PV meter, please follow the steps below to complete the address setting.

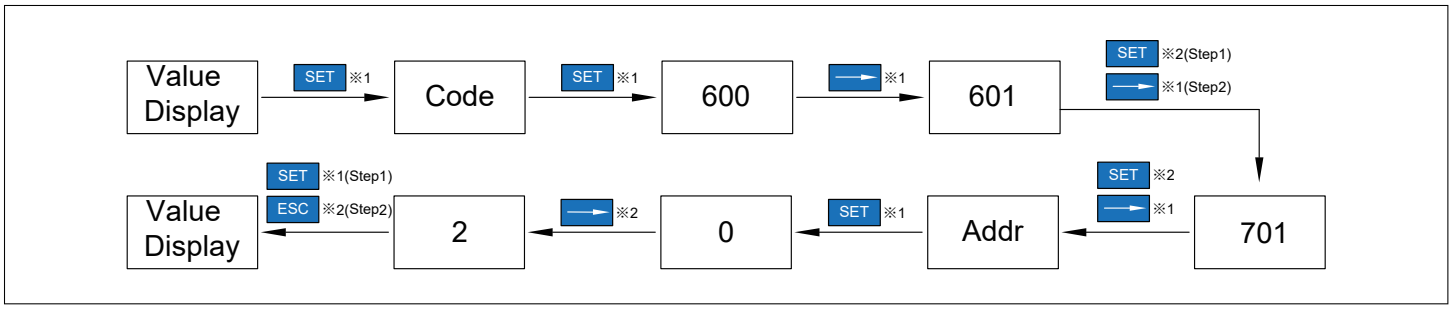

Meter Setting on ZETARA Cloud

Step 1:

When the system work mode is selected as DC, click the button under the "Grid Meter" to turn the "Meter" icon green.

When the system work mode is selected as AC or Hybrid, click the buttons under the "Grid Meter" and "PV side meter" to turn the "Meter" icon green.

Step 2:

Click "Save" and wait a few minutes to refresh the page.

When the "Meter Model" displays DTSU666 model, the setting is successful.

NOTICE	It is forbidden to tick CT to modify the CT ratio.

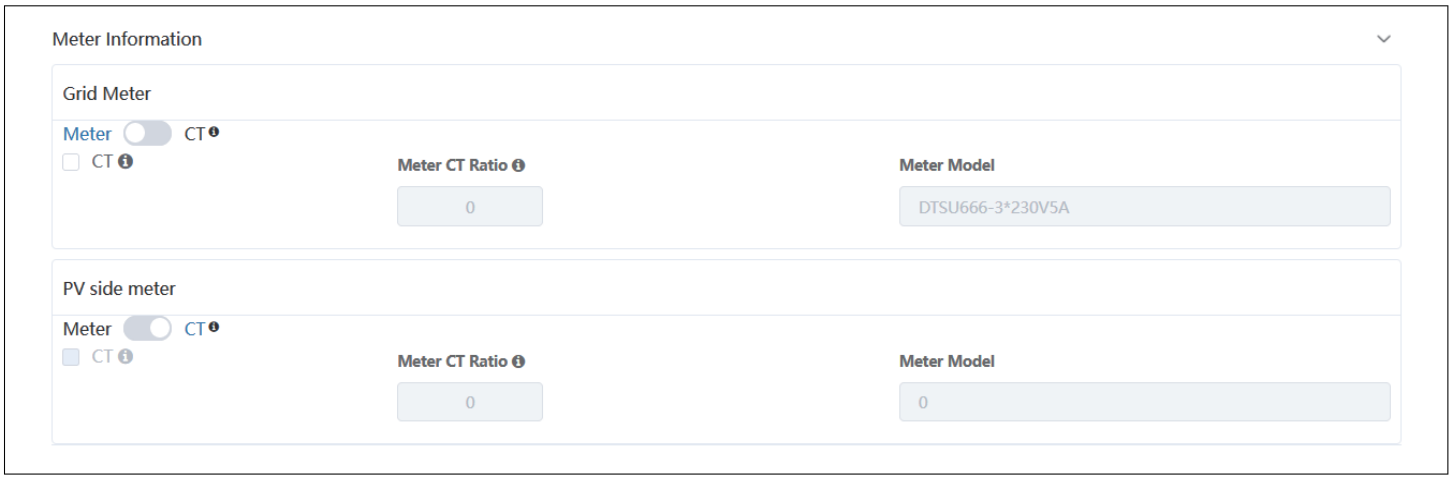

Meter Setting on "ZETARA" APP

Step 1:

When the system work mode is selected as DC, only tick "Meter" icon on the right of the "Grid Meter".

When the system work mode is selected as AC or Hybrid, both tick "Meter" icon on the right of the "Grid Meter" and "PV side meter".

Step 2:

Click "Submit" and enter the "System information" page to check the meter model. When the "Meter Model" displays DTSU666 model, the setting is successful.

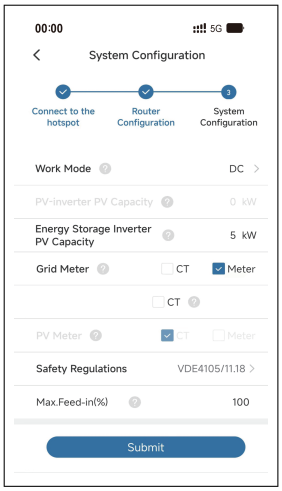

NOTE	It is forbidden to tick CT to modify the CT ratio.

6.4. PV connection

Please ensure the follows before connecting PV strings to the Hybrid inverter:

- Make sure the open voltage of the PV strings will not exceed the max. DC input voltage (950-Vdc). Violating this condition will void the warranty.

- Make sure the polarity of the PV connectors is correct.
- Make sure the PV-switch, breakers of battery, AC-BACKUP and AC-Grid are all in their off-states.
- Make sure the PV resistance to ground is higher than 200kOhms.

The inverter uses the Vaconn D4/MC4(optional) PV connectors. Please follow the picture below to assemble the PV connectors.

PV conductor cross section requirements: 4~6 mm^2.

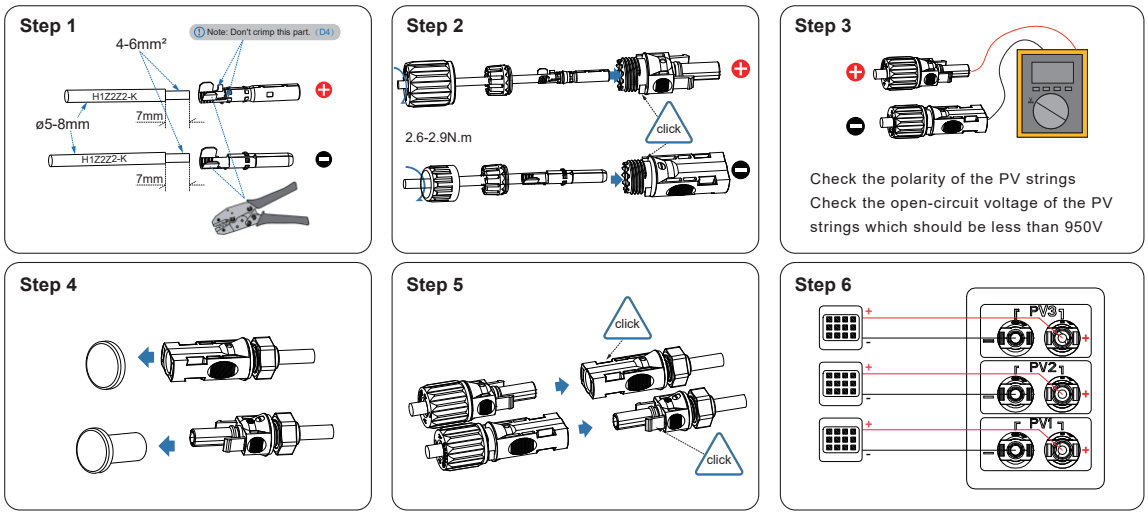

Disassemble the PV Connectors

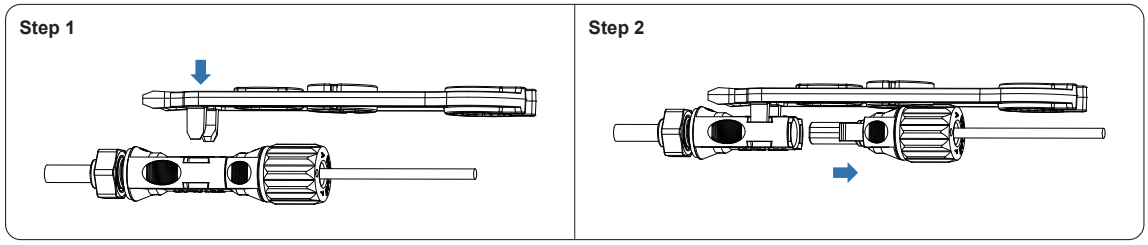

6.5. Electrical connection between the inverter and battery packs

6.5.1. Electrical connection between the inverter and battery

a. Take out the battery communication cable from the battery package.
b. Lead the battery communication cable through the cable gland of the COM connection cover of inverter, don't tighten the swivel nuts of the cable glands, insert the RJ45 plugs to the BMS communication port.
c. The battery communication ports of Battery series are on the side of the battery, unscrew the 4 screws of the communication panel and remove it.
d. Loosen the swivel nut of the cable gland on the battery communication panel, lead the battery communication cable through the cable gland, insert the RJ45 plugs to the BMS communication port of Battery series.
e. Tighten the 4 screws of the communication panel, then tighten swivel nut of the cable gland.

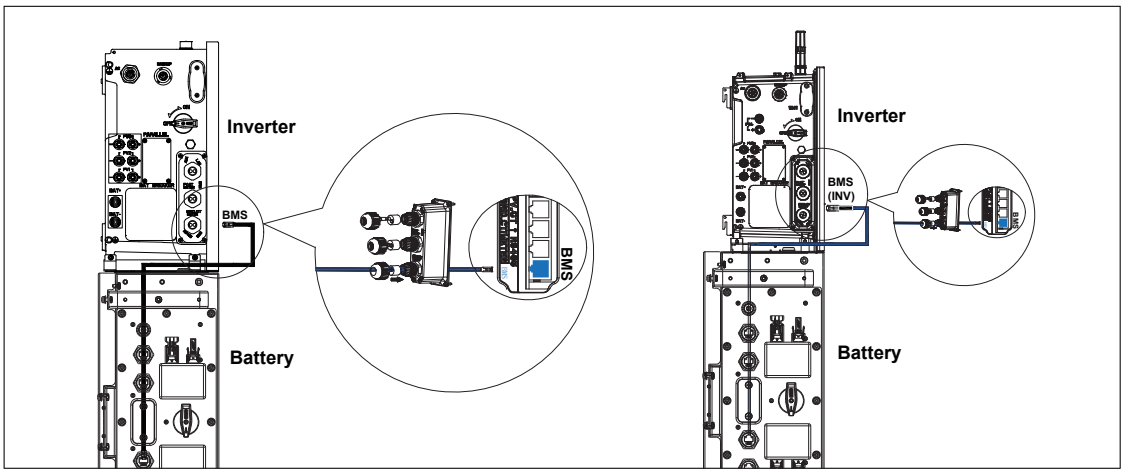

⚠ DANGER	Danger to life due to short-circuiting of the battery

Touching the short-circuit connection of the battery results in death or lethal injuries due to electric shock and massive energy release.

- Switch off the battery breaker which is located on the right side of the battery.
- Please connect both ends of one battery power cable completely before connecting the next power cable to avoid short-circuiting of the positive and negative battery power cables.

Power cable connection:

a. Take out the battery power cables from the battery package.

b. Remove the protective caps from the battery power connectors.

c. Connect the battery power cables to the inverter and battery packs.

Please pay attention to the cable polarity, red cable is for battery positive.

⚠ NOTE	Before connecting the battery power cables,Replace the connector terminal at one end of the power cable in the attachment with the Amphenol H4P connector.

6.5.2. Electrical connection between batteries

For electrical connection between multiple battery packs, please follow steps as chapter 6.5.1. Electrical Connection between the Inverter and First Battery.

For grounding connection between batteries, please refer to Chapter 6.2. Grounding Connecting.

You can install extra batteries up to 6 batteries in a system. Please install extra batteries by side.

NOTICE	Connect the cables between the batteries, route them from the rear side of the battery when two batteries mounting side by side.

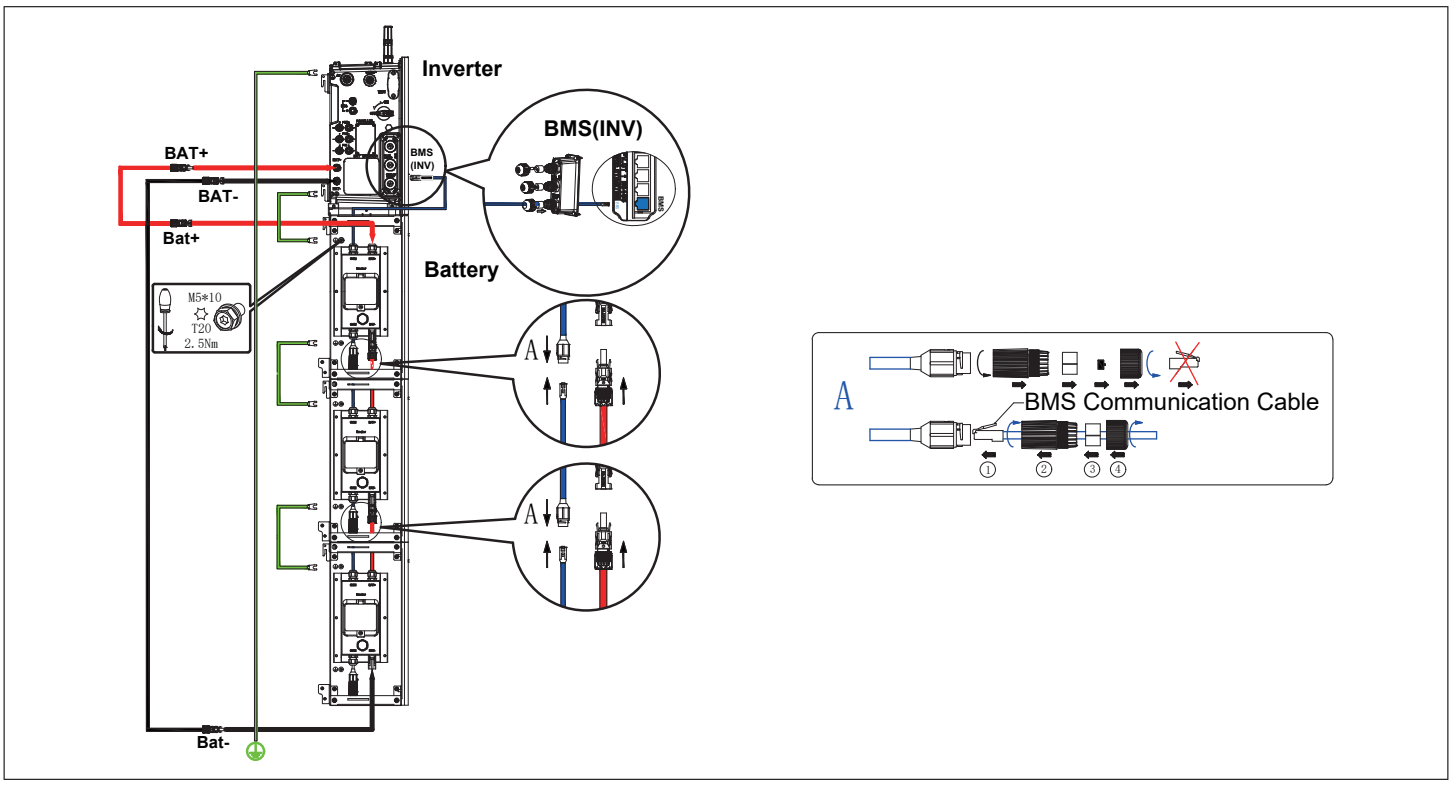

Accessory of cables with the (*) are for battery expansion installation which need to be purchased additionally.

6.5.3. AUX/LAN/DRM&RRCR/Meter/RS485/BMS connection

For other communication (AUX, LAN, RRCR, DRM, Meter, RS485) connection, please follow the below steps.

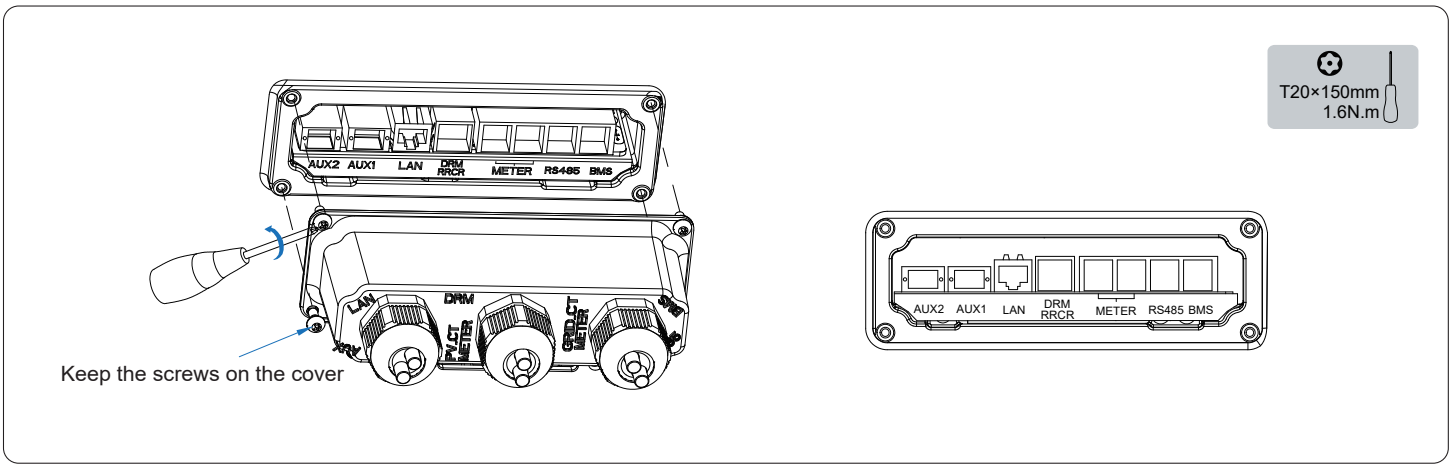

1. Loosen the cable glands on the COM connection cover, and then unscrew the 4 screws on the COM connection cover.
2. Lead the communication cables through the cable glands of the COM connection cover, don't tighten the swivel nuts of the cable glands.
   Insert the RJ45 plugs to the relative RJ45 sockets.

1) For meter wiring, refer to Chapter 6.3.5 for Meter Connection.
2) If DRM support is specified, the system may only be used in conjunction with a Demand Response Enabling Device (DRED). This ensures that the system implements the commands from the grid operator for active power limitation at all times. The system and the Demand Response Enabling Device (DRED) must be connected in the same network.
   Only DRM0 is available for Inverter.
3) Take out 6 pin terminal block for AUX connection. To do wiring connection, insert a screwdriver (blade width: 1.2 mm) into the relative connection position side.
   For AUX position definition, please see the AUX wiring documentation.

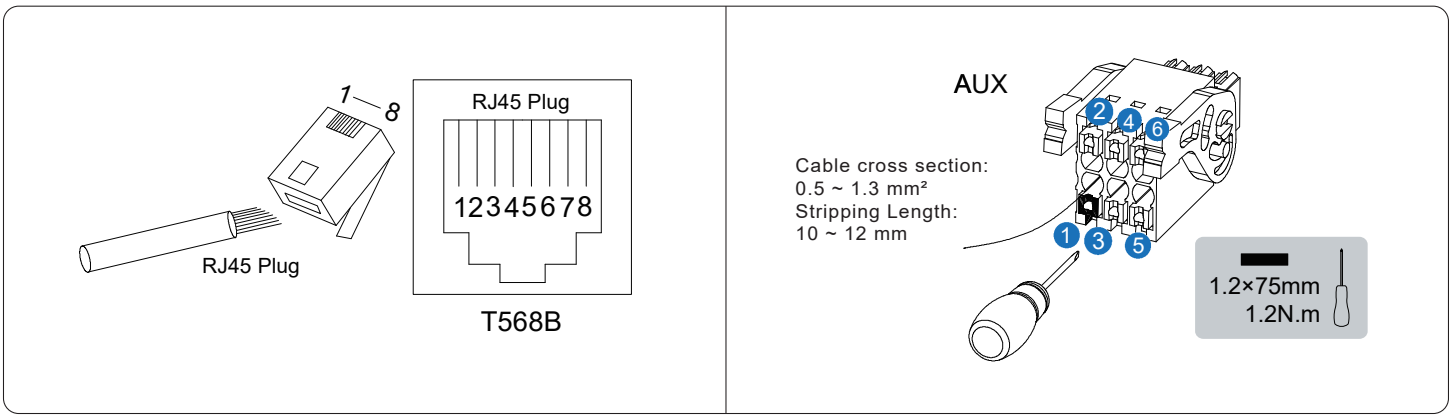

3. Place the COM connection cover against the inverter housing and tighten the 4 screws, at last secure the swivel nut of the cable glands.

The pin definition of the communication ports:

ITEM \ No	1	2	3	4	5	6	7	8
BMS	NC	RS 485-A4	NC	CAN1-H	CAN1-L	NC	RS 485-B4	NC
RS485	12V	DEBUG-RXD-COM	GND	RS 485-B5	RS 485-A5	NC	DEBUG-TXD-COM	NC
METER	NC	NC	RS485-A7	NC	NC	RS 485-B7	NC	NC
DRM	DRED 1/5	DRED 2/6	DRED 3/7	DRED 4/8	REF GEN/0	COM LOAD/0	NC	NC
RRCR	K1	K2	K3	K4	3.3V	NC		
AUX 1	DO1_NO	DO1_COM	DO1_NC	DI-negative	DI-positive	GND		
AUX 2	DO2_NO	DO2_COM	DO2_NC	DI-negative	DI-positive	GND		

07 INSTALLER ACCOUNT REGISTER AND INSTALL NEW SYSTEM

7.1. Register on app

7.1.1. Download and install app

1. Android device users can download the"ZETARA" App through major Android application mar kets such as Google Play.
2. IOS device users can search for "ZETARA" in App Store and download the App.

7.1.2. Register as installer account

If you don’t have an installer account, please register firstly.

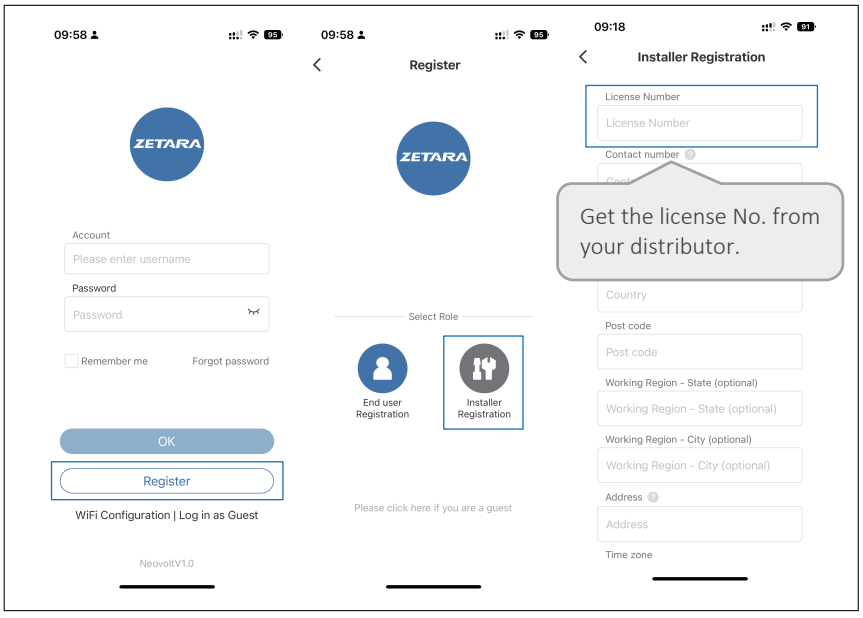

If you already have an installer account, please log in directly.

7.1.3. Overview of functions for installer account



7.1.4. Install new system

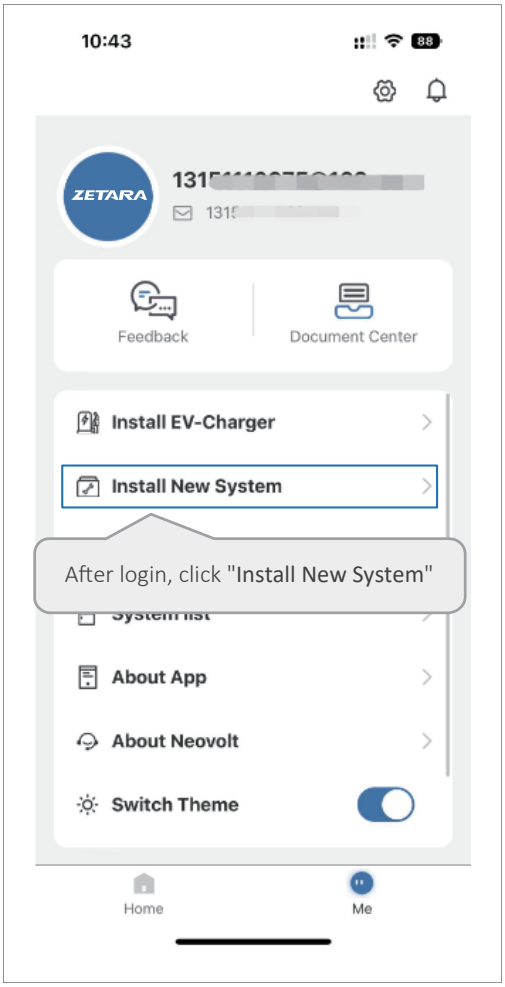

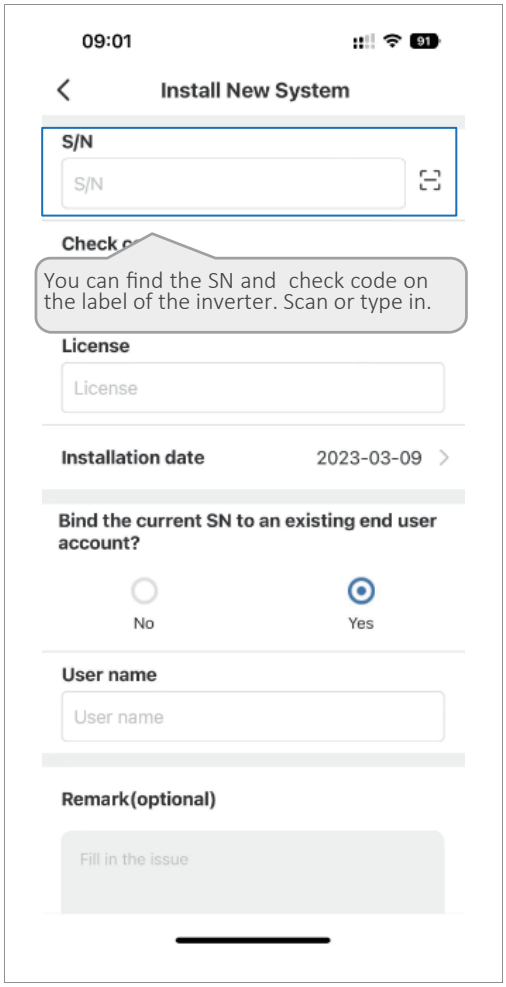

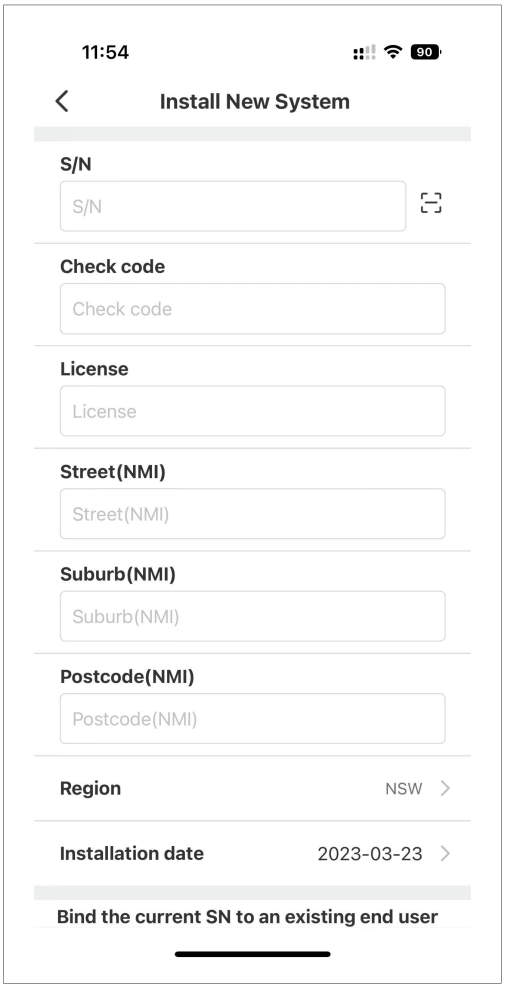

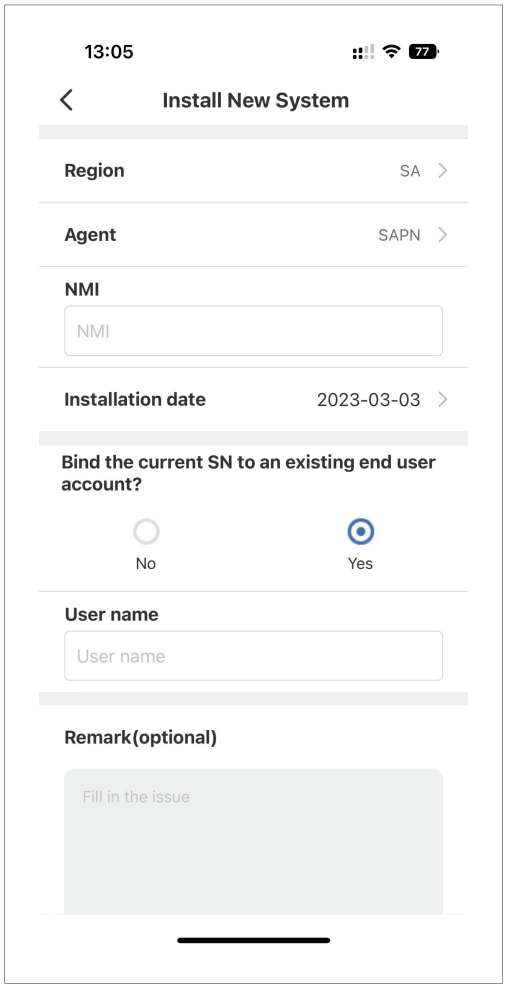

Australian Installer

Please enter your installer account and click Install New System to bind the system to your account and set the system.
Enter S/N, check code, license, create time, customer full name, contact number, address, and click the save button. If you are an Australian installer, you will need to fill in the Street (NMI), Suburb (NMI) and Postcode (NMI) fields and add a new Region field, which has six fixed options (NSW, QLD, VIC, SA, TAS, WA). If SA is selected for Region, two more fields are added which are Agent and NMI.
Fields that are not marked "optional" need to be filled in.
Click "Next" to go to the installation steps interface.

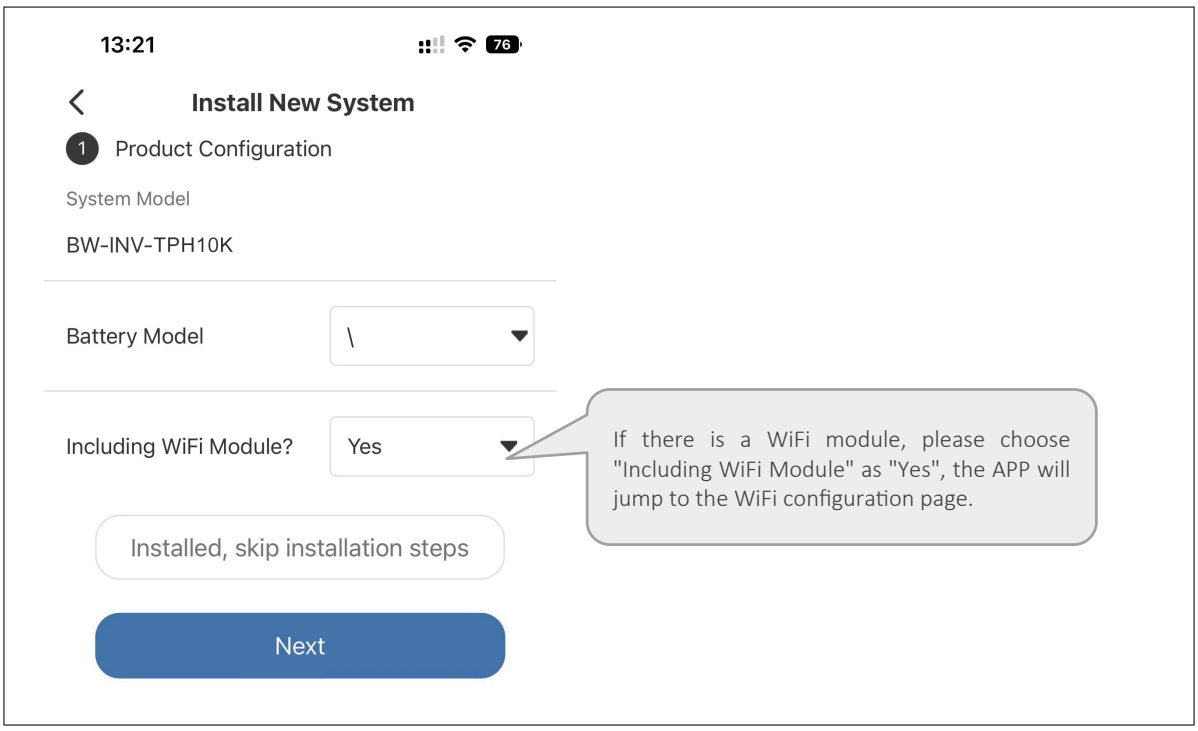

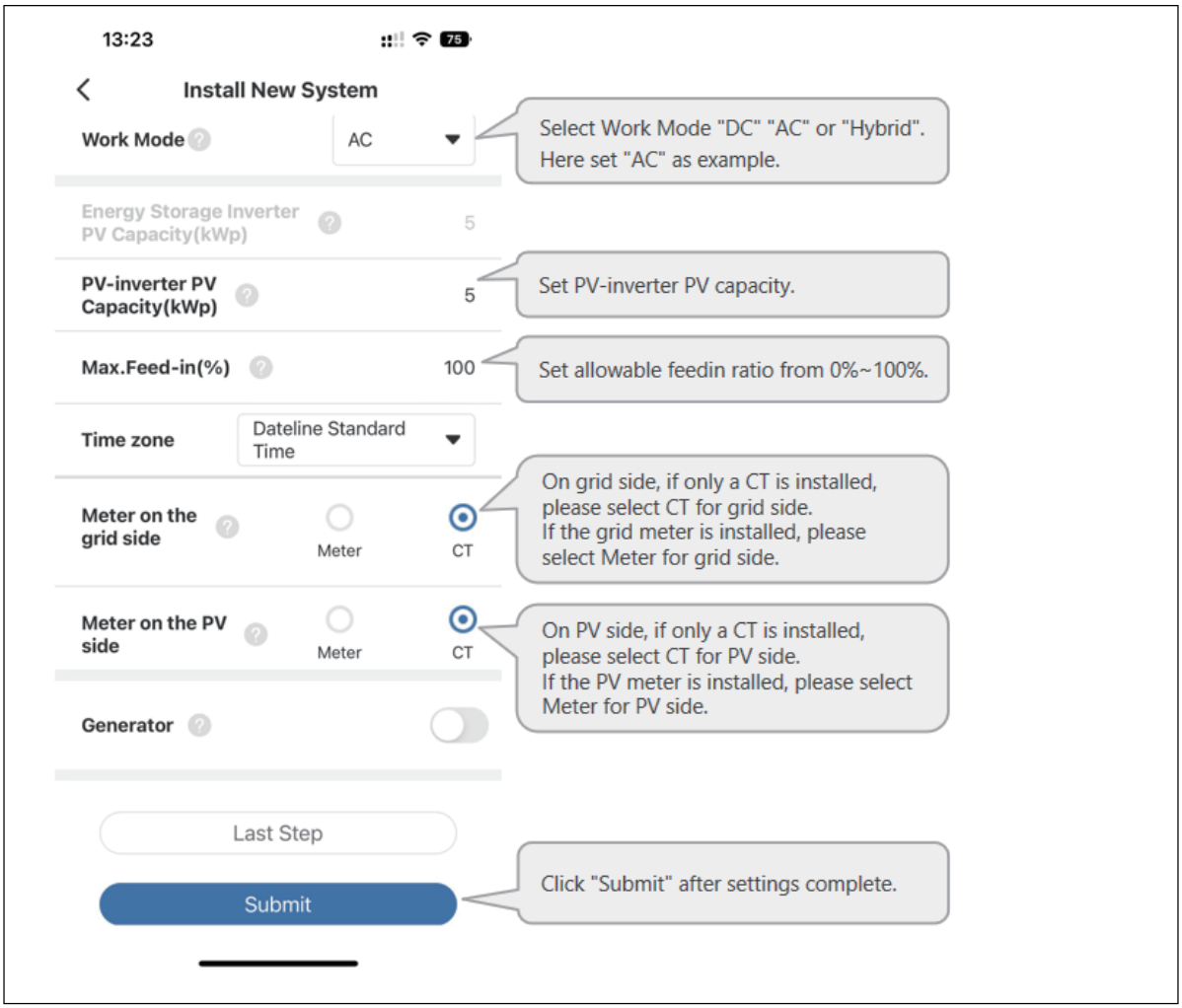

NOTICE	The safety standard must be set correctly

If you select a safety standard which is not valid for your country and purpose, it can cause a disturbance in the energy storage system and lead to problems with the grid operator. When selecting the safety standard, you must always observe the locally applicable standards and directives as well as the properties of the PV system (e.g. PV system size, grid-connection point).

- If you are not sure which safety standard is valid for your country or purpose, contact your grid operator for information on which safety standard is to be configured.

If there is a WiFi module, please choose "Including WiFi Module" as "Yes", the APP will jump to the WiFi configuration page, please refer to additional documentation "APP COMMISSIONING GUIDE".

7.2. Register on cloud

7.2.1. Register as installer account

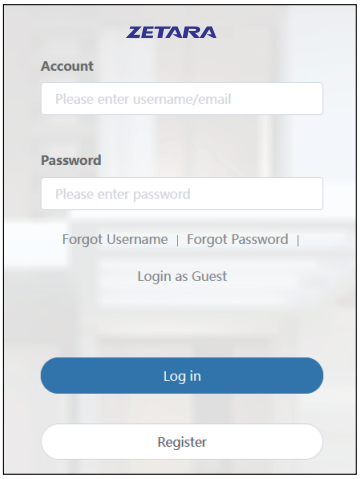

You can create a new account on our web server for the normal monitoring. In addition, a part of our warranty is based on this connection to our web server. The data produced prior to registration can be synchronized to the web server.

Step1: Please use the following steps: Open the portal: https://cloud.zetarapower.com.

Step2: Please fill in "Username", "Password" and click "Login" if you have already registered.

If not, please register by filling in the following web form:

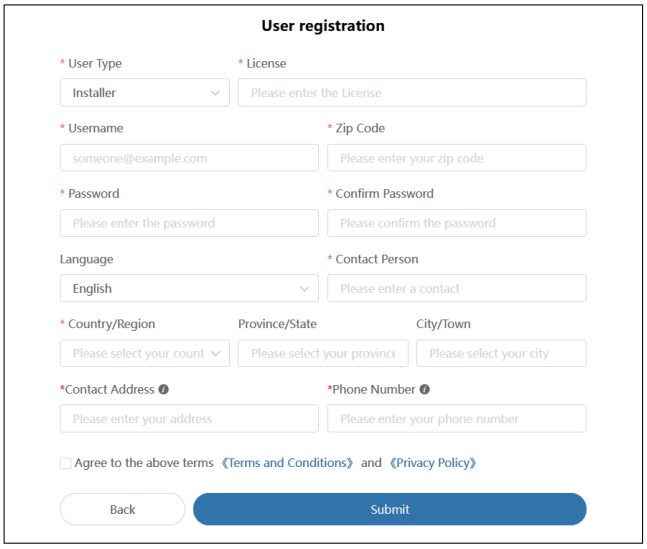

In this form, all fields with a red star are compulsory, and you can select the finally users or installation procedures.

***Serial number:** EMS serial number.(please see the nameplate of the inverter)

***Username:** Must be an email address.

***Password:** 5-15 letters / numbers / characters

More details are available in the Online Monitoring Web Sever Installers User Manual, which can be downloaded from ZETARA homepage.

7.2.2. Install new system

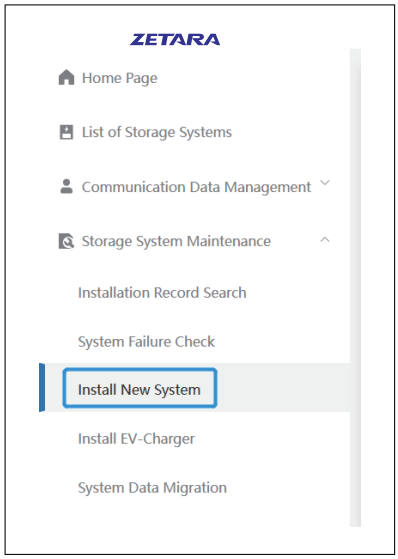

Log in to your installer account and choose Storage System Maintenance> "Install new system" to register new system at ZETARA Cloud.

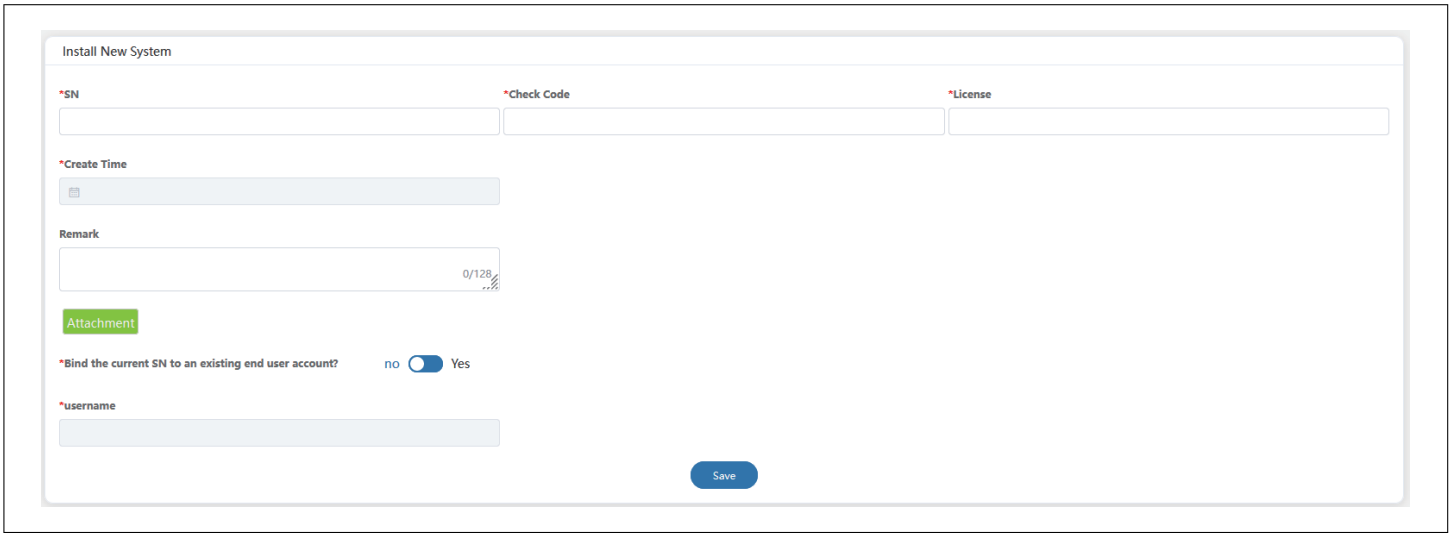

Enter the system S/N, check code, license, installation date and click the save button. The red * in front of it is required. Click the "Attachment" button to select the attachment you want to add.

08 POWERING ON AND OFF THE SYSTEM

8.1. Powering on the system

Procedure

Step1: Switch on the PV switch (if there is any) on the left side of the inverter.
Step2: Switch on the breaker between the inverter and the host of all batteries
Step3: Switch on the battery breakers of all batteries.
Step4: Shortly press power buttons one of the batteries within 5 seconds, then other batteries will be activated by high voltge.
Step5: Switch on the AC breaker between the grid port of the inverter and the grid.
Step6: Switch on the AC breaker between the backup port of the inverter and the loads.
Step7: Switch on the AC breaker (if there is any) between the PV-inverter and the grid.

8.2. Powering off the system

⚠ WARNING	After the energy storage system is powered off, the remaining electricity and heat may still cause electric shocks and body burns. Therefore, put on protective gloves and operate the product 5 minutes after the power-off.

Procedure

Step1: Switch off the AC breaker between the Hybrid inverter and the load.
Step2: Switch off the PV switch (if there is any) on the left side of the inverter.
Step3: Switch off the PV switch on the side of the Hybrid inverter if there is any.
Step4: Long press the power button of each battery for 6 seconds. For series batteries, please skip this step.
Step5: Switch off the battery breakers of all batteries.
Step6: Switch off the AC breaker between the inverter and the grid.

9.1. Checking before power-on

No.	Check Item	Acceptance Criteria
1	Mounting environment	The mounting space is proper, and the mounting environment is clean and tidy, without foreign objects.
2	Battery pack and inverter mounting	The battery pack and inverter are mounted correctly, securely, and reliably.
3	Wi-Fi mounting	The Wi-Fi module is mounted correctly, securely, and reliably.
4	Cable layout	Cables are routed properly as required by the customer.
5	Cable tie	Cable ties are secured evenly and no burr exists.
6	Grounding	The ground cable is connected correctly, securely, and reliably.
7	Switch and breakers status	The PV switch (if there is any) and battery breakers and all the breakers connecting to the product are OFF.
8	Cable connections	The AC cables, PV cables (if there is any), battery power cables, and communication cables are connected correctly, securely, and reliably.
9	Unused power terminals	Unused power ports and communication ports are blocked by watertight caps.

9.2. Mount the cover

9.2.1. Mount the right cover and cable cover

Mount the right cover

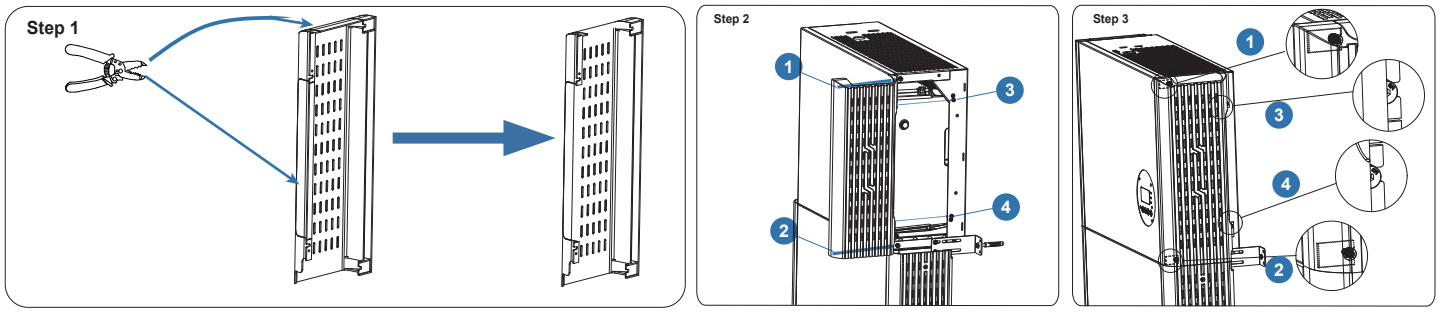

Mount the cable cover

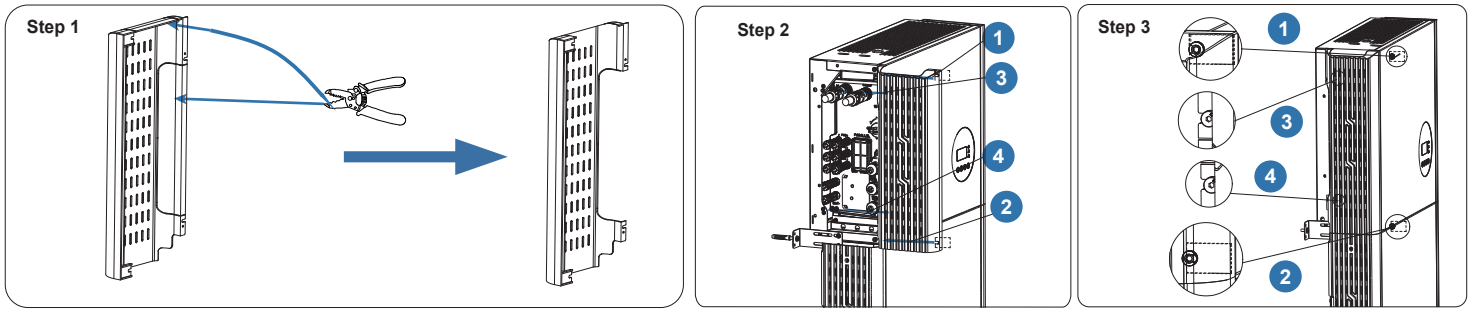

9.3. Mount the Wi-Fi module.

Remove the Wi-Fi protection cover and screw the Wi-Fi module.

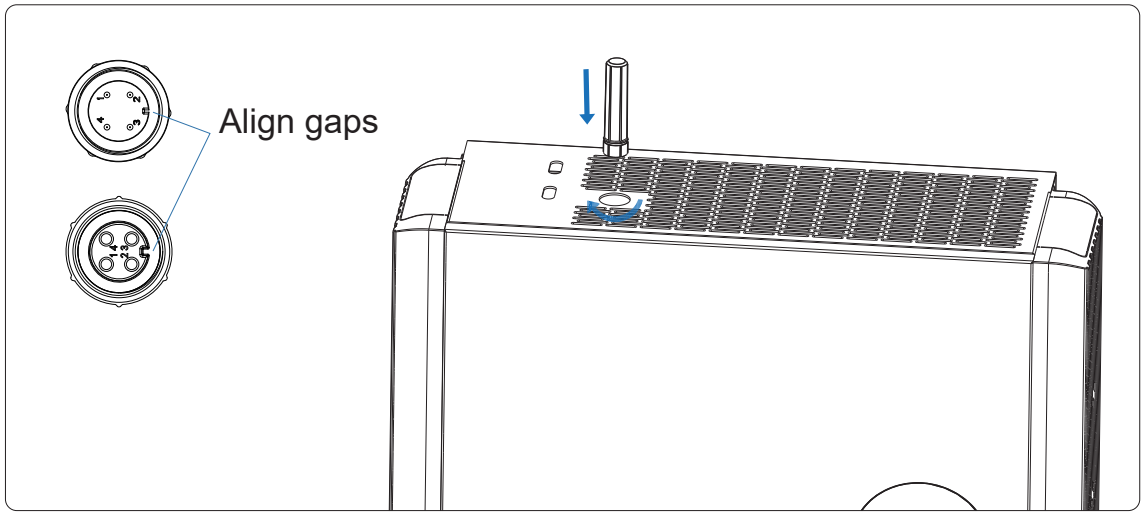

After finishing electrical connection of energy storage system, do the following operations.

- Check the voltage range and frequency range of the grid and the installation of meter (without CT).
- Install the top and right decorative cover of the inverter.
- Follow the instructions in Chapter 8.1. to powering on the system.
- Install the cable cover of the inverter.

9.4. Wi-Fi module configuration and app usage

This section is for users who have an energy storage system with a Wi-Fi module.
ZETARA APP is able to configure the network, set system basic parameter, monitor system operation status and check configuration information.
Please refer to below documentation "APP COMMISSIONING GUIDE" for more details on APP setup and usage.

9.4.1. Wi-Fi configuration instruction guide

Section1 Preparatory work

Step1: Make sure the interver's Wi-Fi dongle is powered on ;
Step2: Make sure the Wi-Fi router is powered on;
Step3: For IOS users, search for "ZETARA" on App Store to install the app.
For Android usesrs, search for "ZETARA" on Google Play to install the app.

Section2 Wi-Fi configuration

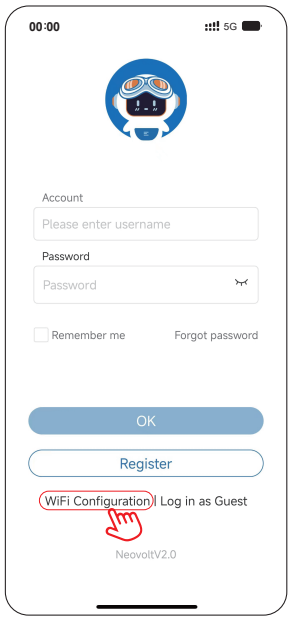

Step1 : Open the "ZETARA" APP and Click "Wi-Fi Configuration"

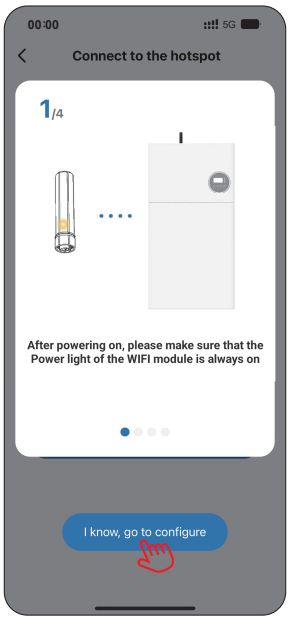

Step2 : Click "I know, go to configure"

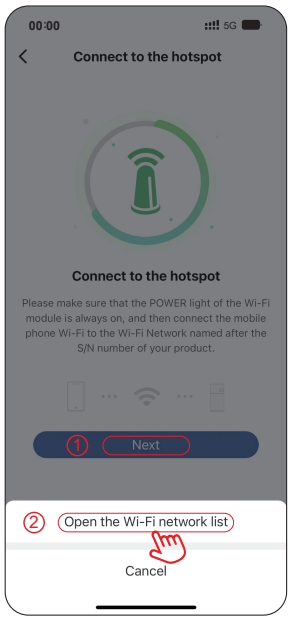

Step3 : Click the "Next" button, then Click "Open the Wi-Fi network list"

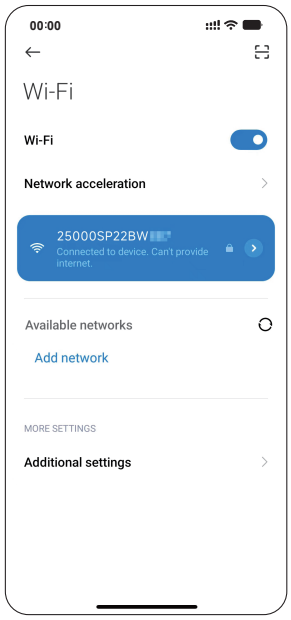

Step4 : Select the Wi-Fi SSID (named after SN) and input the default Password (12345678)

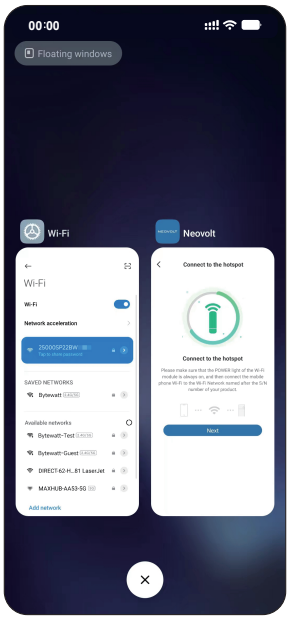

Step5 : After successfully connecting to the SSID, swipe your screen to return to the "ZETARA" APP

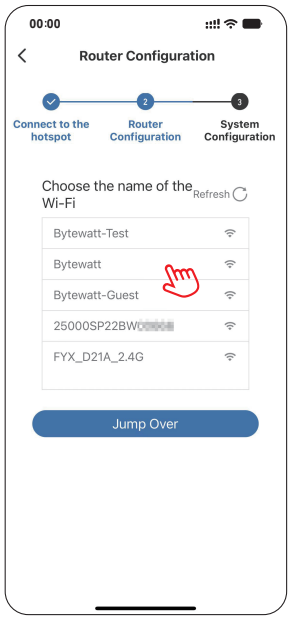

Step6 : Select the Wi-Fi network name of home router

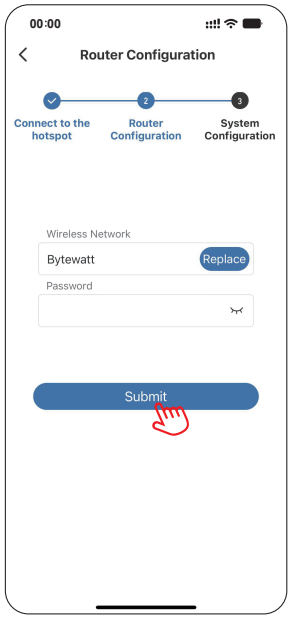

Step7 : Enter the home router Password, click “Submit”

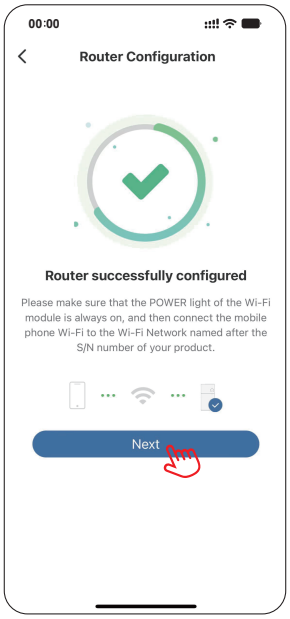

Step8 : Wait until router successfully configured, click “Next”

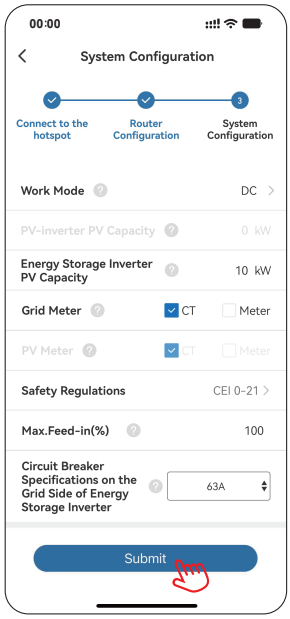

Step9 : Set the parameters, then click “Submit”

9.4.2.Check the running state

Section1 : Check the running state of PV and battery

Step1 : Keep the AC breaker between the grid port of the energy storage inverter and the grid off, and keep the AC breaker between the backup port of the energy storage inverter and the loads off;
Step2 : Press the battery button. If there are more than one battery, press the button of each battery and the interval time of powering on each battery should be less than 5s;
Step3 : Switch on the AC breaker between the grid port of the energy storage inverter and the grid;
Step4 : Switch on the PV switch on the energy storage inverter and AC breaker on the PV-inverter if any;
Step5 : Switch off all the loads to see the battery charging status and the inverter’s “SYS” LED indicator will be solid on white. Battery power value should be negative. If the system is in AC or hybrid mode, the PV inverter power value should be positive. If PV inverter power value is negative, please check the direction of PV CT or PV meter installed.

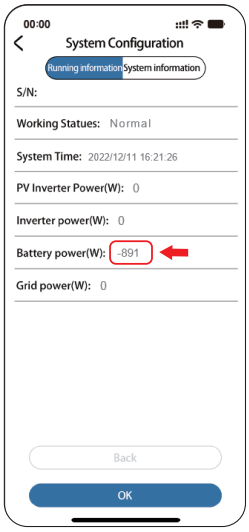

DC Mode

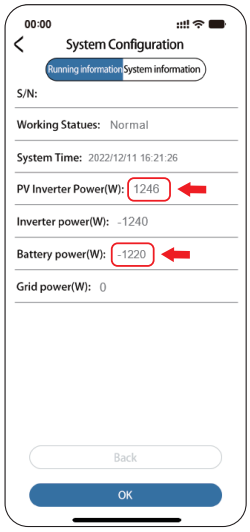

AC Mode

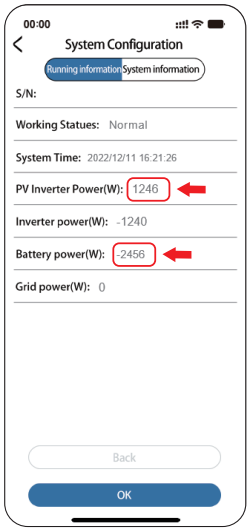

Hybrid Mode

Section2 : Check the UPS state

Step1 : Keep the inverter in normal state, as described in the previous section.
Step2 : Connect to the Load;
Step3 : Turn off the switch of the Inverter’s AC (Connected the Grid);
Step4 : Check if the “WORKING STATUS” is “UPS”, and also check if the Load working normally.
Step5 : Turn on the the switch of the Inverter’s AC, to return to normal state.

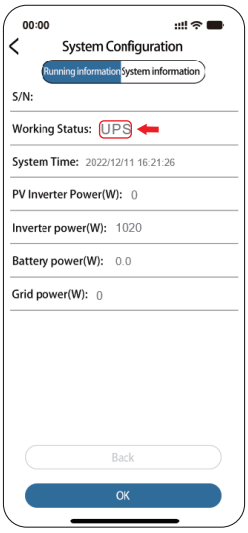

9.4.3.Install a new system

Section1 Register as an installer

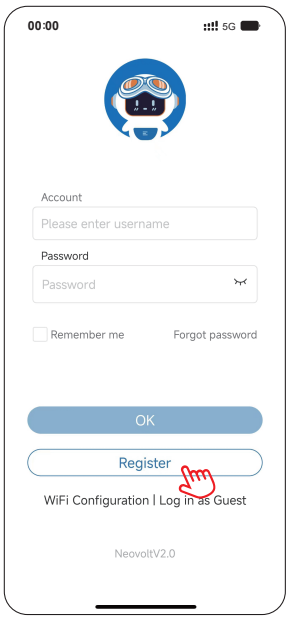

Step1 : Open the ZETARA App and click "Register"

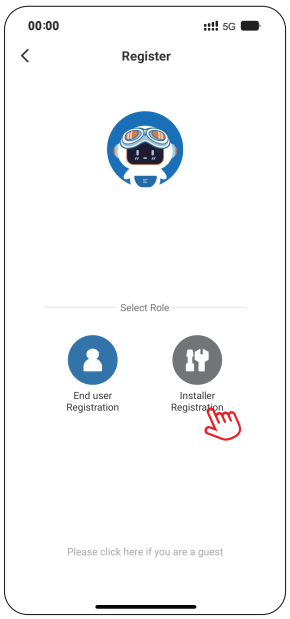

Step2 : Select "Installer Registration"

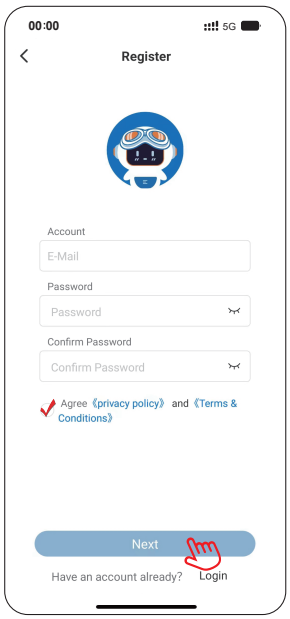

Step3 : Input your email and password. Click"Next"

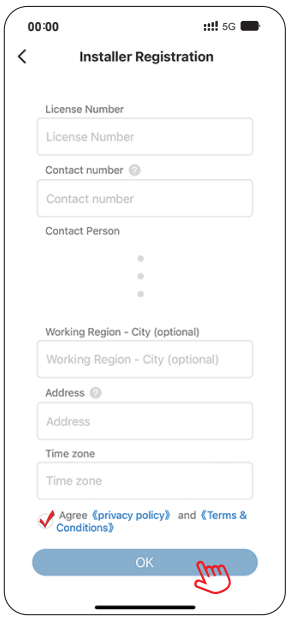

Step4 : Input license number,contact number and other informations needed, then Click OK, Verify email

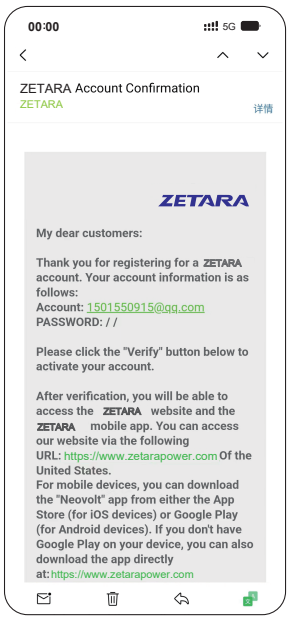

Step5 : After submitting your account information,
you will receive a confirmation email. Click "Verify" button in this email to complete the registration progress

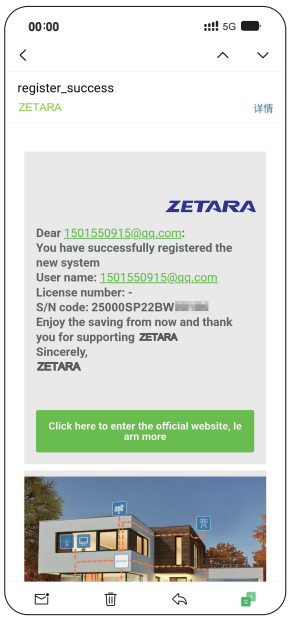

Step6 : You will receive an additional email to inform you if you have successfully completed the registration process. Please return to the "ZETARA" APP to continue

⚠ NOTE If you don't receive this email in your inbox, please contact our after-sales for assistance.

Section2 Install new system

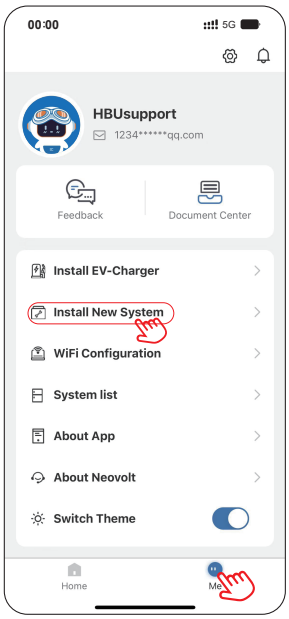

Step1 : Click “Me”, then click “Install New System”

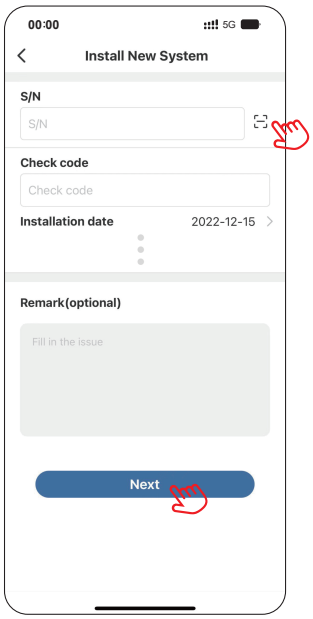

Step2 : Get your “S/N” and check code from the electrical parameter label, scan or input them then click “Next”

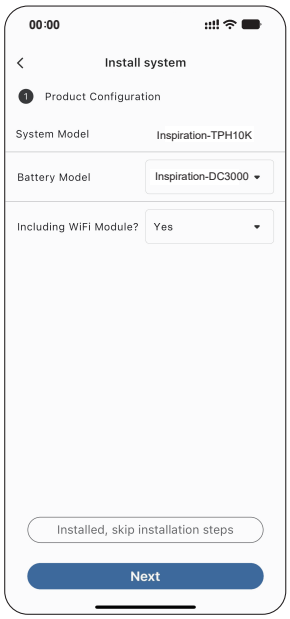

Step3 : If you have already complete the installation, Click “installed, skip”. Otherwise, input the further information step by step to complete the process

9.4.4.Check the running state online

Step1: Check the Charging Function of the Product.

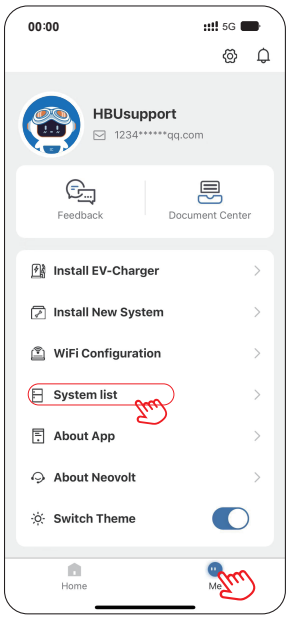

① Click “Me”, then Click “System List”

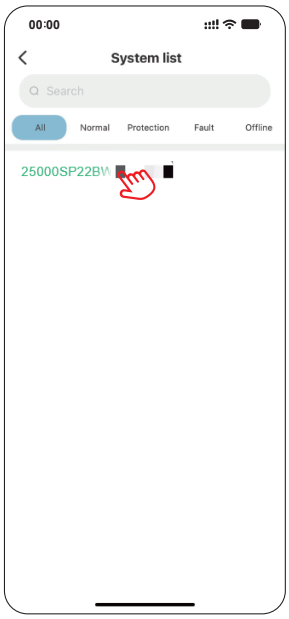

② Choose your system (SN)

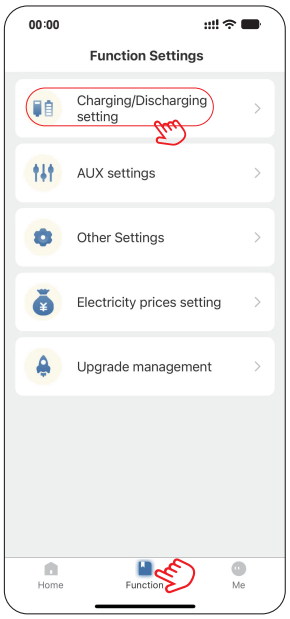

③ Click “Function”, then click “Charging / Discharging setting”

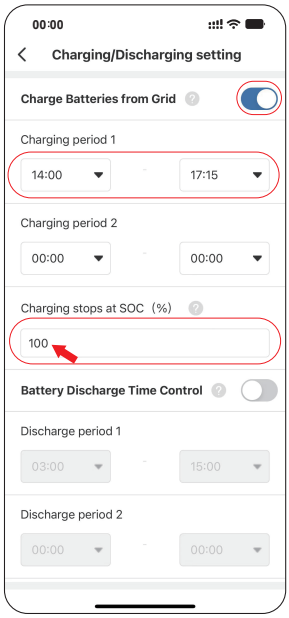

④ Switch the button on to Charge Batteries from Grid, set "Charging Period 1"and Charging stops at SOC

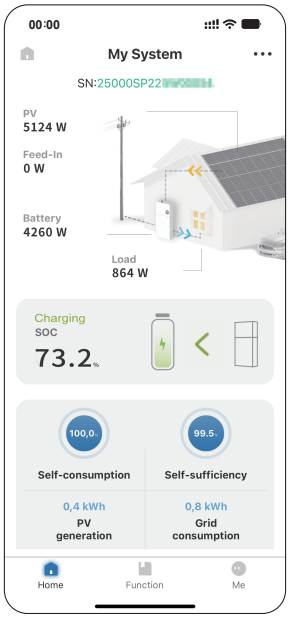

⑤ Make sure the setting is correct

If the value is negative, please check the CT or meter installed direction of both grid and PV side

TIPS :

The relative value should be like this :

Load = PV ± GRID-Battery.;

Battery should be in charging status;

PV arrow should be as shown in the picture;

± :

>> absorbing from grid: +;

<< feed-in to grid - .

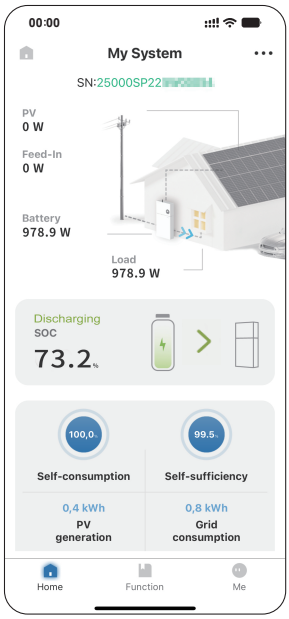

Step1 : Check the battery discharging status

① Switch off the PV;
② Switch on the energy storage inverter;
③ Switch on the AC breaker on the PV inverter if there is any.

TIPS :

The relative value should be like this:

Load = GRID + Battery.

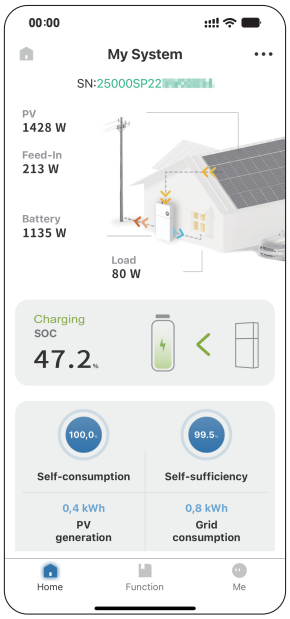

Step2 : Check the system running status

① Switch on the PV;
② Switch on the energy storage inverter;
③ Switch on the AC breaker on the PV inverter if there is any.

TIPS :

The relative value should be like this :

Load = PV ± GRID ± Battery;

± : charging : - ; discharging : + ;

PV arrow should be as the picture shows;

± :

>>absorbing from grid : +;

<< feed-in to grid : -.

⚠ NOTE

During commissioning, if the LED indictors on the display panel of the inverter or the battery pack show red, please refer to troubleshooting.

Tip : Please don't forget to switch on all of the breakers.

10 PARALLEL SETUP

10.1. Inverters Operation in Parallel Mounting

Inverters Operation in Parallel Mounting, the mount steps same as 05 and 9.2

10.2. Scope of Delivery

 Parallel communication cable(x1)	 Parallel communication cable 3M(x1)	 Documentation(×1)

10.3. Electrical Connection

⚠ ATTENTION

When inverters are operating in parallel, the measurement unit at the feed-in point must utilize the meter type of DTSU666-3*230V 250A/50mA(with CT).

⚠ NOTE

- The batteries connecting to the same inverter must be connected together. The battery cluster connecting the each inverter must not be connected together.
- The number and type of batteries connected to each inverter should be the same.
- The Max. number of series batteries connected to each inverter is 6.
- The backup connection ports of three phase inverter forbid connecting in parallel.
- The grid connection ports (symbolled with “AC”) of three phase inverter must be connected in parallel.
- The Max. number of inverters operating in parallel is 3.
- Each inverter operating in parallel must be connected with battery.
- Each inverter operating in parallel must be connected with PV modules.
- Each inverter installing PV modules should have the same PV installed capacity. Otherwise it will cause the battery SOC difference between the battery clusters.

10.3.1. AC Wiring to Grid Combiner Cabinet

Wiring sequence	From	Recommended Cable type	To
1	Mains grid	Five-core (L1, L2, L3, N and PE) outdoor copper cable, 25~35 mm²	Grid combiner cabinet
2	Grid combiner cabinet	Five-core (L1, L2, L3, N and PE) outdoor copper cable, 4~6 mm²	Grid connection port of the host inverter
3	Grid combiner cabinet	Five-core (L1, L2, L3, N and PE) outdoor copper cable, 4~6 mm²	Grid connection port of the follow inverter

10.3.2. Verify the Electrical Connection

Please confirm the following connection

(1) BAT power connection and grounding connection between the batteries connected to each inverter have finished.

(2) BMS communication connection between the batteries connected to each inverter is completed.

(3) Please finish PV arrays connection to the inverters, please refer to the “Inverter Quick Installation Guide”(As shown in Figure ①).

(4) Insert the backup connector plugs into the sockets for the backup connection. When doing so,make sure to align the key on the backup connection socket with the keyway on the backup connector plug (As shown in Figure ②).

(5) Wiring grid connector plugs, then insert the grid connector plugs into the sockets for the grid connection. When doing so, make sure to align the key on the grid connection socket with the keyway on the grid connector plug (As shown in Figure ③).

Figure ①

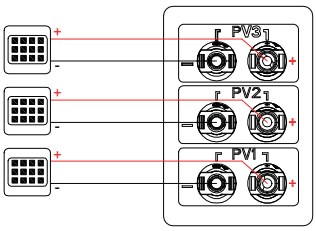

Figure ②

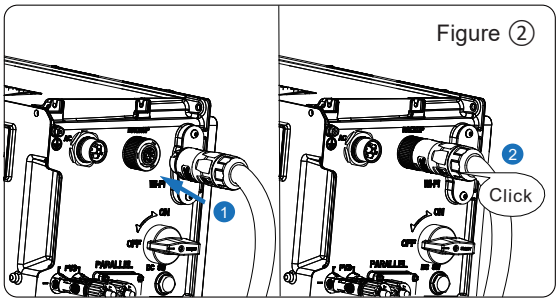

Figure ③

Electrical connection between grid connection ports of the inverters and grid combiner cabinet is completed.

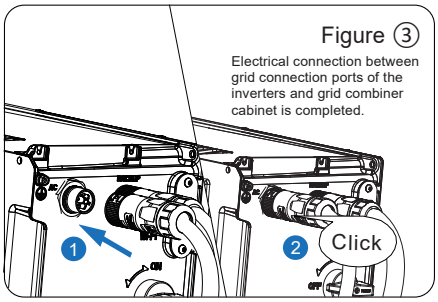

(6) Communicate connection between these inverters, refer to the relative “System Wiring Diagram” of parallel installation.

Wire the communication connection of inverters operating in parallel.

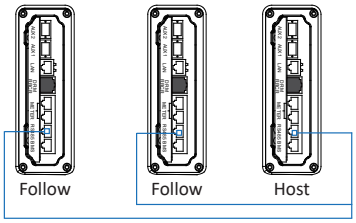

Parallel connection diagram for three inverters
(Use the Parallel communication cable)

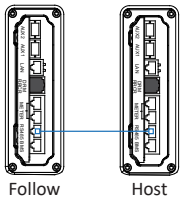

Parallel connection diagram for two inverters
(Use the Parallel communication cable 3M)

(7) Please refer to the “Inverter Quick Installation Guide” to mount the cable cover.

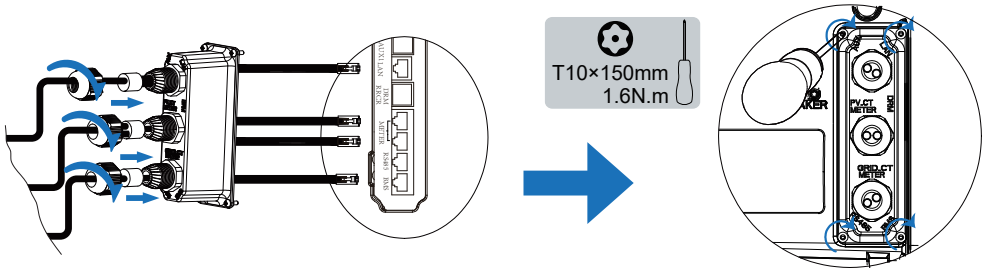

(8) Contact the technical service team service to upgrade the firmware of the inverters and batteries supporting parallel operation. Switch on the AC circuit breakers between grid connection ports of the inverters and the mains grid and check the LCD of all inverters to see whether the firmware version of the inverters and batteries is consistent with the reminders from service.

10.4. Commissioning

10.4.1. System Upgrade

Contact the technical service team service to upgrade the firmware of the inverters and bateries supporting parallel operationSwitch on the AC circuit breakers between grid connection ports of the inverters and the mains grid and check the LCD of allinverters to see whether the firmware.

10.4.2. Set the parallel function

Inverter display interface introduction

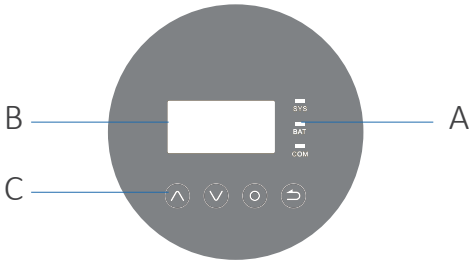

Object	Name	Description	
A	SYS LED	Red: The inverter is in fault.	
		White: The inverter is in normal state.	
	BAT LED	White: The battery is in charging or discharging.	
	COM LED	White: The inverter is in communication.	
B	LCD Dispaly	Display the information of the energy storage system.	
C	Button Function		Escape from current interface or function.
			Move cursor to upside or increase value.
			Move cursor to downside or decrease value.
			Confirm the selection.

(1) Installer should execute parallel setting on the LCD of the inverters.Refer to the flow chart below.

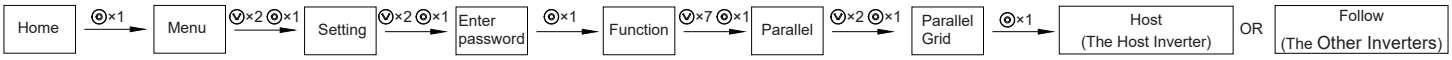

(2) After completing the above setup, please confirm whether the system setup is successful and turn off the inverter.

10.5. Power ON and OFF the Three Phase Parallel System

Power on and off the three phase parallel system, the steps same as 08.

11 MAINTENANCE AND TROUBLESHOOTING

11.1. Routine maintenance

Normally, the energy storage system need no maintenance or calibration.

However, in order to maintain the accuracy of the SOC, it is recommended to perform a full charge calibration for SOC (charging battery until the charging power is 0) on the battery at regular intervals (such as two weeks).

Disconnect the system from all power sources before cleaning. Clean the housing, cover and display with a soft cloth.

To ensure that the energy storage system can operate properly in the long term, you are advised to perform routine maintenance on it as described in this chapter.

Maintenance checklist

Check Item	Acceptance Criteria	Maintenance Interval
Product cleanliness	The heatsink at the back of the product are free from obstacles or dust.	Once every 6 to 12 months
Product visible damage	The product are not damaged or deformed.	Once every 6 months
Product running status	1. The product operate with no abnormal sound. 2. All parameters of the product are correctly set. Perform this check when the product is running.	Once every 6 months

Electrical connections	1. Cables are securely connected. 2. Cables are intact, and in particular, the cable jackets touching the metallic surface are not scratched. 3. Unused cable glands are blocked by rubber sealing which are secured by pressure caps.	Perform the first maintenance 6 months after the initial commissioning. From then on, perform the maintenance once every 6 to 12 months.

⚠ CAUTION Risk of burns due to hot heatsink and housing

The heatsink and housing of the inverter can get hot during operation.
- During operation, do not touch any parts other than the cover.
- Wait approx. 30 minutes before cleaning until the heatsink has cooled down.

11.2. Troubleshooting

11.2.1. Inverter error troubleshooting

Error No.	Error description	Troubleshooting
100007	Insulation_fault	1. Check whether PV cable connection is reliable. 2. Check whether PV cable is damaged.
100008	GFCI_fault	Restart system and check whether the fault is existing.
100009	Leakage current test failure	
100025	BAT_OVP	Check whether the actual battery voltage exceeds the battery charging cut-off voltage by more than 20V.
100026	BAT_UVP	Check whether the actual battery voltage is lower than the battery discharge cut-off voltage.
100042	Output_short_circuit	1. Use a multimeter to test the impedance of the off grid output. If it is small, check whether the wiring is correct. 2. Restart system, if error still exists, please call the service center.
100043	Output_overload	1. Check whether the load exceeds the rated power. 2. Restart system, if error still exists, please call the service center.
100043	Grid Load Reverse	1. Check whether cables are reversed (whether Grid cable is connected to the Backup side). 2. Restart system, if error still exists, please call the service center.
100144	LPE Reverse	1. Check whether the L cable is connected to the Grounding. 2. Restart system, if error still exists, please call the service center.

100160	DCI	Restart system to see if the fault still exists. If still exists, please call the service center.
100161	SW Consistency	Perform the remote upgrading again and ensure that the version of CPU1 and CPU2 upgrade files is the same.
100162	N-N Reverse Lost	1. The system installed in Australia needs to check whether N-N is short-circuited. 2. If not in Australia, set the safety standard cor rectly. 3. Restart system, if error still exists, please call the service center.
100220	inv_line_short	1. Check whether the load is short-circuited con nected. 2. Restart system, if error still exists, please call the service center.
110000	Bat over-voltage alarm	Check that the actual battery voltage is 10V higher than the battery charging cut off voltage.
110001	Bat under-voltage alarm	Check that the actual battery voltage is 10V higher than the battery discharging cut-off voltage.
110002	output_overload_ alarm	Check whether the load exceeds 0.95 of the rated power.
110019	Bat Reverse	Check whether battery positive and negative connections are reversed.
110021	Grid Loss	1. Wait for the Grid power return to normal. 2. If Grid is normal, check the connections to the grid terminal. 3. Restart system, if error still exists, please call the service center.
110022	Grid Volt	
110023	Grid Freq	
110024	10min Grid Volt	
110026	PE Loss	1. Check whether the grounding cable is disconect ed. 2. Restart system(This warning does not affect system running).
110027	LN Reverse	1. Check whether the Grid L/N cable are reversed connected. 2. Restart system, if error still exists, please call the service center.

110028	Low Temperature	1. Wait for the temperature to return to normal (above -20℃). 2. If temperature is normal, restart system, if error still exists, please call the service center.
110029	GFCI	1. Check whether there is leakage current in system cables. 2. If no abnormal connection, but still error frequently, please call the service center.
110033	Island	Normal protection mode, no action is required.
110034	Fan Abnormal	Restart system, if error still exists, please call the service center.
110035	N Loss	1. Check whether the Grid N cable is disconnected. 2. Restart system, if error still exists, please call the service center.
110039	Machine Type	Restart system, if error still exists, please call the service center.
110040	Inv Volt Low	1. Check whether the Backup load power exceeds the inverter rated power. 2. Restart system, if error still exists, please call the service center.
110047	Bus Under	1. Wait for the Grid power restore to normal. 2. Charge the battery and wait until the battery restore.
110051	Reduce PBy Over Freq	Wait for the Grid power restore to normal.
110052	Reduce PBy Over Volt	Wait for the Grid power restore to normal.
110053	Reduce PBy Over Temp	Wait for the inverter temperature returns to normal.
110054	HVRT	Wait for the Grid power restore to normal.
110055	LVRT	Wait for the Grid power restore to normal.
110056	Bat Open	Check the battery circuit breaker and the battery circuit breaker on the inverter are on.
110060	EMS CAN ALARM	Restart system, if error still exists, please call the service center.

110061	EMS SCI ALARM	Restart system, if error still exists, please call the service center.
110074	PV Over Volt	1. Check whether the configured voltage of the PV panel is greater than 950V(Use a multimeter to measure the PV terminal voltage). 2. Restart system, if error still exists, please call the service center.
110082	N-N Reverse Lost	1. The system installed in Australia needs to check whether N-N is short-circuited. 2. If not in Australia, set the safety standard cor rectly. 3. Restart system, if error still exists, please call the service center.
110083	bat_num_abnormal	Restart system, if error still exists, please call the service center.
34	parallel_host_lost	Host inverter communication lost in parallel system.
35	parallel_form_lost	Slave inverter communication lost in parallel system.
41	parallel_ems_ver_dif-ferent	Inverter EMS software version mismatch in paral-lel system.
42	parallel_dsp_ver_dif-ferent	Inverter DSP software version mismatch in parallel system.
43	parallel_inv_sub_dif-ferent	Inverter model mismatch in parallel system.

11.2.2. Common Faults（Phenomenon）and Solutions

The three LED indicators on the front cover provide information about the error status of the battery.

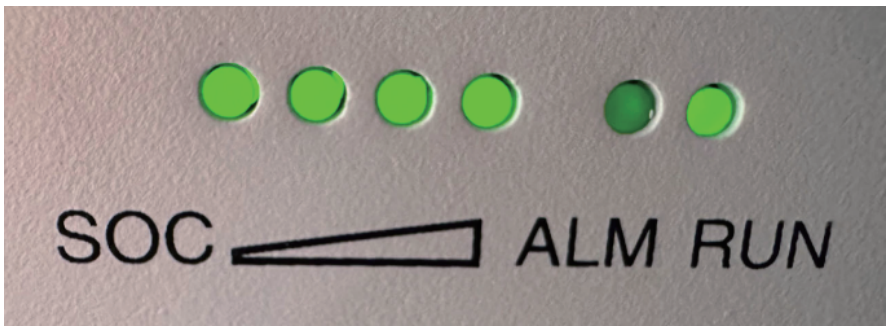

Battery Error Description:

NO.	Fault phenomenon	Analysis	Solution
1	Communication failure with inverter	Communication port connect error or battery ID setting error	Check communication connection or ID settings
2	No DC output	Not close breaker or low voltage	Close breaker or charge the battery
3	Power supply time is too short	Battery capacity lack or not fully charged	Maintenance or replacement
4	Battery can't be fully charged	Power system DC output voltage falls below the minimum charge voltage	Regulating DC output voltage of power supply to battery suitable charging voltage
5	ALM LED always lights	Power line connection short circuit	Disconnect the power cable and check all cables
6	The battery output voltage is unstable	DCDC system do not operate normally	Press the reset button to reset the system, then reboot the system
7	ALM LED flash 2 second and Green LED off	Can't charged and discharged	Check DCDC status
8	RUN LED flash 0.5 second and ALM LED off	Can charged and can't discharged	Charged model
9	RUN LED flash 2 second and ALM LED off	Can discharged and can't charged	discharged model
10	Different SOC value of batteries in parallel	Normal phenomenon	No operation

12 UNINSTALLATION & RETURN

12.1. Removing the product

Procedure

Step 1: Power off the energy storage system by following instructions in Chapter 8.2. Powering Off the System.

Step 2: Disconnect all cables from the product, including communication cables, PV power cables, battery power cables, AC cables, and PE cables.

Step 3: Remove the WiFi module.

Step 4: Remove the product from the wall bracket. Remove the expansion battery from the wall bracket.

Step 5: Remove the wall brackets.

12.2. Packing the product

If the original packaging is available, put the product inside it and then seal it using adhesive tape. If the original packaging is not available, put the product inside a suitable cardboard box and seal it properly.

12.3. Disposing of the product

- If the product service life expires, dispose of it according to the local disposal rules for electrical equipment and electronic component waste.
- Dispose of the packaging and replaced parts according to the rules at the installation site where the device is installed.
- Do not dispose the product with normal domestic waste.

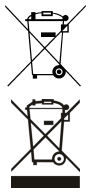

13 SPECIFICATION

13.1. Datasheet of inverter

Item	Inspiration-TPH4K	Inspiration-TPH5K	Inspiration-TPH6K	Inspiration-TPH8K	Inspiration-TPH10K
Input DC (PV side)					
Recommended Max. PV power	8000W	10000W	12000W	16000W	20000W
Max. PV Input Voltage	1100 V				
Rated Voltage	720 V				

Start-up Voltage	85 V				
Mppt Voltage Range	140 ~ 950 V				
Max. Input Current Per MPPT	16 A / 16 A / 16 A				
Max. Short Circuit Current Per MPPT	24 A / 24 A / 24 A				
MPPT Number	3				
Max Input Strings Number Per MPPT	1				
Battery					
Battery Type	LFP ($LiFePO_4$)				
Battery Voltage Range	90 ~ 700 V				
Maximum Charging Power	4 kW	5 kW	6 kW	8 kW	10 kW
Maximum Charge/ discharge current	50 A / 50 A				
Communication	CAN				
Output AC (Back-up)					
Rated Output Power	4 kW	5 kW	6 kW	8 kW	10 kW
Max Apparent Output Power	4 kVA	5 kVA	6 kVA	8 kVA	10 kVA
Back-up Switch Time	<20 ms				
Rated Output Voltage	3L/N/PE，380/400V				
Rated Frequency	50/60 Hz				
Rated Output Current	5.8 A	7.2 A	8.7 A	11.6 A	14.5 A
THDV(@linear load)	< 3%				

Input AC (Grid side)					
Rated Input Power	8 kW	10 kW	12 kW	16 kW	20 kW
Max. Input Current	11.6 A	14.5 A	17.4 A	23.2 A	29 A
Output AC(Grid side)					
Rated output power	4 kW	5 kW	6 kW	8 kW	10 kW
Max. Apparent Output Power	4.4 kVA	5.5 kVA	6.6 kVA	8.8 kVA	11 kVA
Operation Phase	Three phase				
Rated Grid Voltage	3L/N/PE，380/400V				
Grid Voltage Range	150 ~ 288 V				
Rated Grid Frequency	50 / 60 Hz				
Rating Grid Output Current	5.8 A	7.2 A	8.7 A	11.6 A	14.5 A
Power Factor	>0.99 (0.8 leading to 0.8 lagging)				
THDI	< 3%				
Protection Class	I				
Pollution Degree	II				
Overvoltage Category	III				
Efficiency					
Max Efficiency	>97.8 %	>97.8 %	>97.8 %	>98 %	>98 %
EU Efficiency	>97.3%	>97.3%	>97.3%	>97.5%	>97.5%

Protection	
Anti-Islanding Protection	Integrated
Insulation Resistor Detection	Integrated
Residual Current Monitoring Unit	Integrated
Output Over Current Protection	Integrated
Output Short Protection	Integrated
Output Overvoltage Protection	Integrated
DC Reverse Polarity Protection	Integrated
PV Overvoltage Protection	Integrated
PV Switch	Integrated
Battery Breaker	Integrated
General Data	
Dimensions (W*H*D)	590*416*206 mm
Weight	29 kg
Topology	Transformerless
Operation Temperature Range	-25 ~ +60 °C
Ingress Protection	IP65
Noise Emission	<30 dB/<45 dB(12kw&15kw)
Cooling Concept	Natural convection/Smart FAN(12kw&15kw)
Max. Operation Altitude	3000 m
Grid Connection Standard	G98, VDE-AR-N 4105, EN 50549-1,VDE 0126, RD 1699, CEI 0-21, C10/11, NRS 097-2-1, TOR Erzeuger, MEA, PEA, AS/NZS 4777.2

Safety/ EMC Standard	IEC62109-1/-2 IEC/EN61000-6-1/2/3/4
Features	
PV Connection	Vaconn D4 connectors
Grid Connection	Plug in connector
Back-up Connection	Plug in connector
BAT Connection	Amphenol H4 connectors
Communication	LAN, Wi-Fi
Warranty	5 years standard (10 years optional)

13.2. Datasheet of battery

Model	Inspiration-DC3000
Battery Type	LFP (LiFePO4)
Weight	~55 kg
Dimension (W*D*H)	590 * 730 * 206 mm
Ingress Protection	IP65
Energy Capacity	5.1kWh
Usable Capacity	4.85 kWh
DoD	95%
Nominal Voltage	384V
Operating Voltage Range	350~ 435 V
Max. Charging / Discharging Current *	8.8A

Operating Temperature Range	Charge: 0<T<50℃ / Discharge: -10<T<50℃
Monitoring Parameters	System voltage, current, cell voltage, cell temperature, PCBA temperature
BMS Communication	CAN
System	
Safety	IEC62619/IEC62040
Warranty	5 Years product warranty, 10 Years performance warranty
Transportation	UN38.3

* Max. charge/discharge current derating will occur related to temperature and SOC.

Appendix 1: System overview

Please see the following wiring diagram of the system principle, divided into European, Australian and other regions.

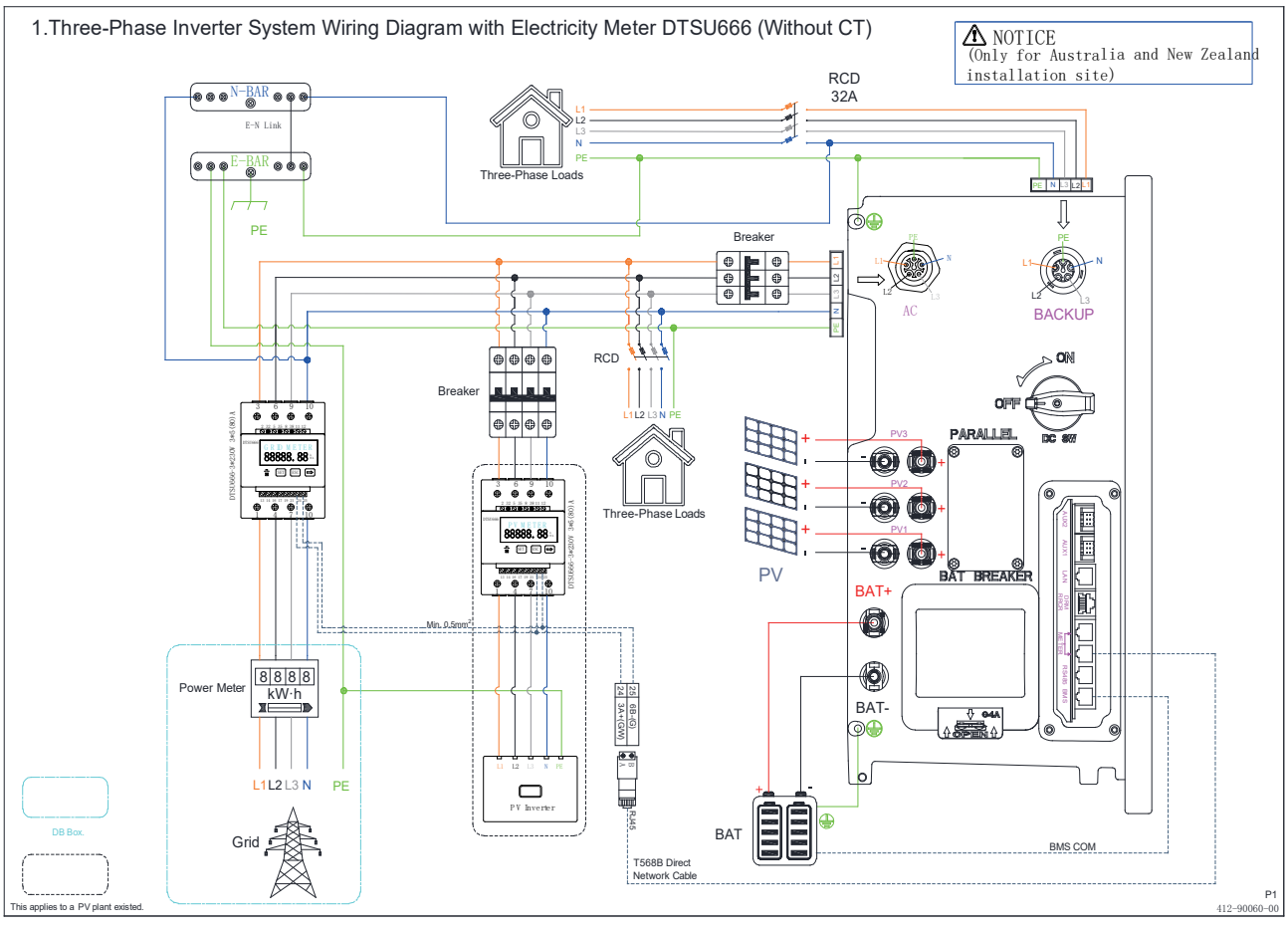

2.Three-Phase Inverter System Wiring Diagram with Electricity Meter DTSU666 (With CT)

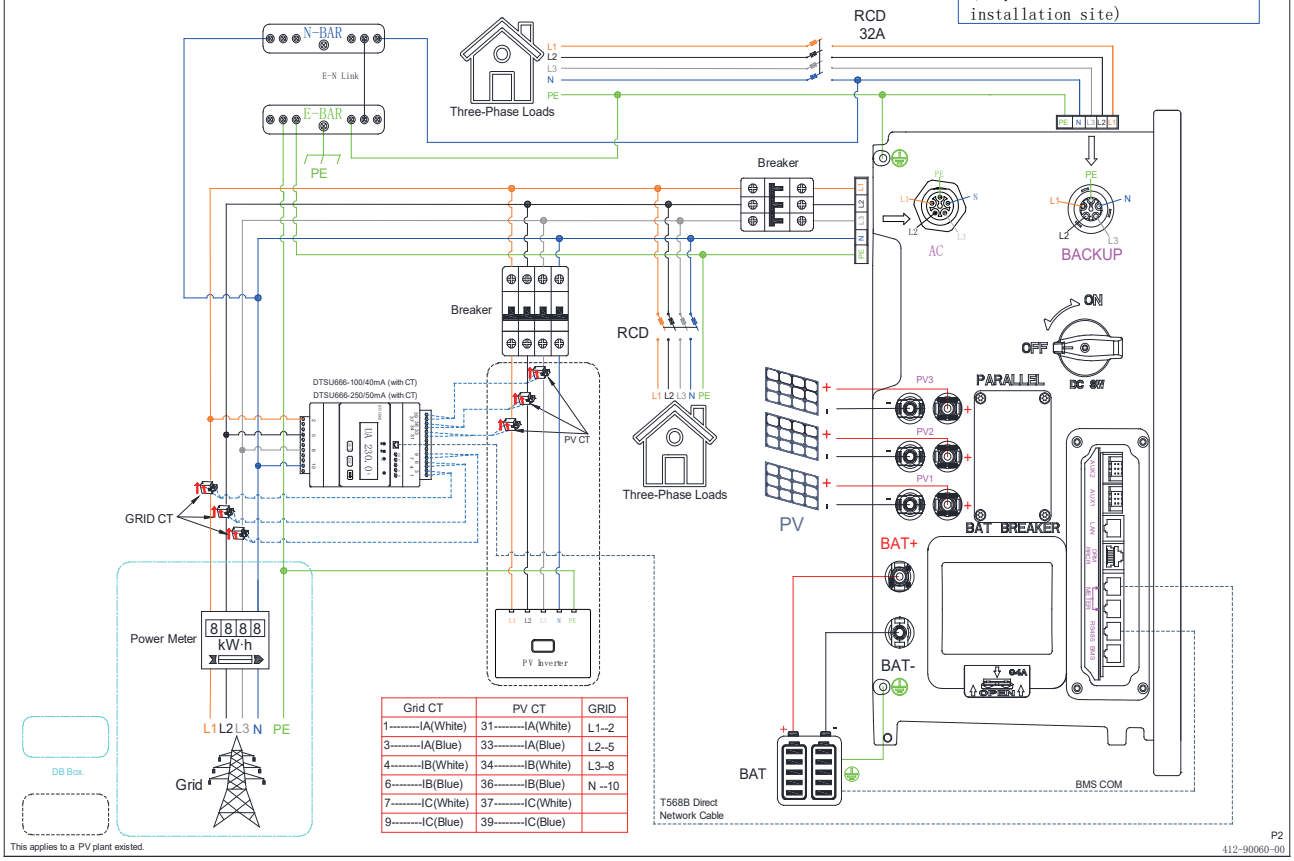

Grid CT	PV CT	GRID
1--------IA(White)	31--------IA(White)	L1--2
3--------IA(Blue)	33--------IA(Blue)	L2--5
4--------IB(White)	34--------IB(White)	L3--8
6--------IB(Blue)	36--------IB(Blue)	N --10
7--------IC(White)	37--------IC(White)	
9--------IC(Blue)	39--------IC(Blue)	

1.Three-Phase Inverter System Wiring Diagram with Electricity Meter DTSU666 (Without CT)

AC	BACKUP
L1--------A	L1--------A
L2--------B	L2--------B
L3--------C	L3--------C

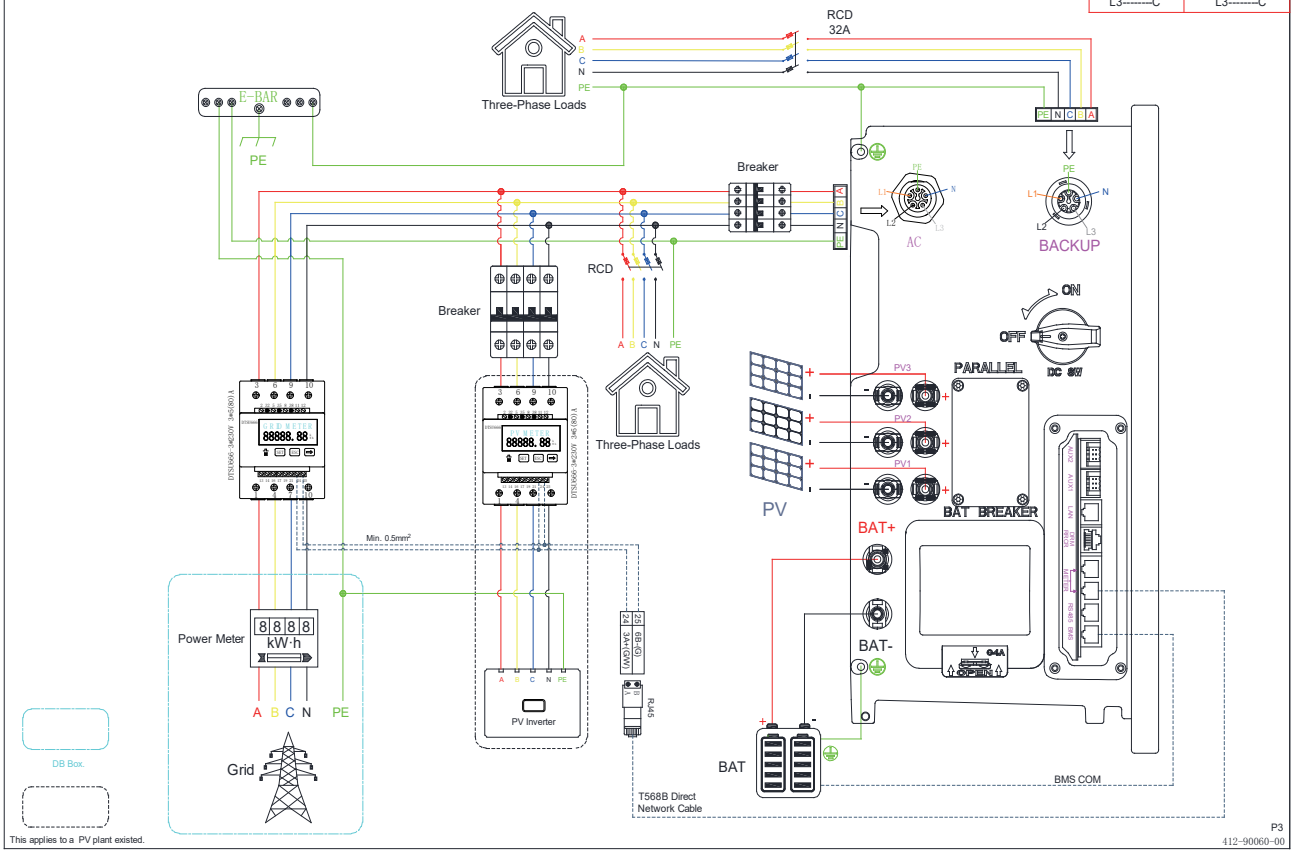

2.Three-Phase Inverter System Wiring Diagram with Electricity Meter DTSU666 (With CT)

AC	BACKUP
L1--------A	L1--------A
L2--------B	L2--------B
L3--------C	L3--------C

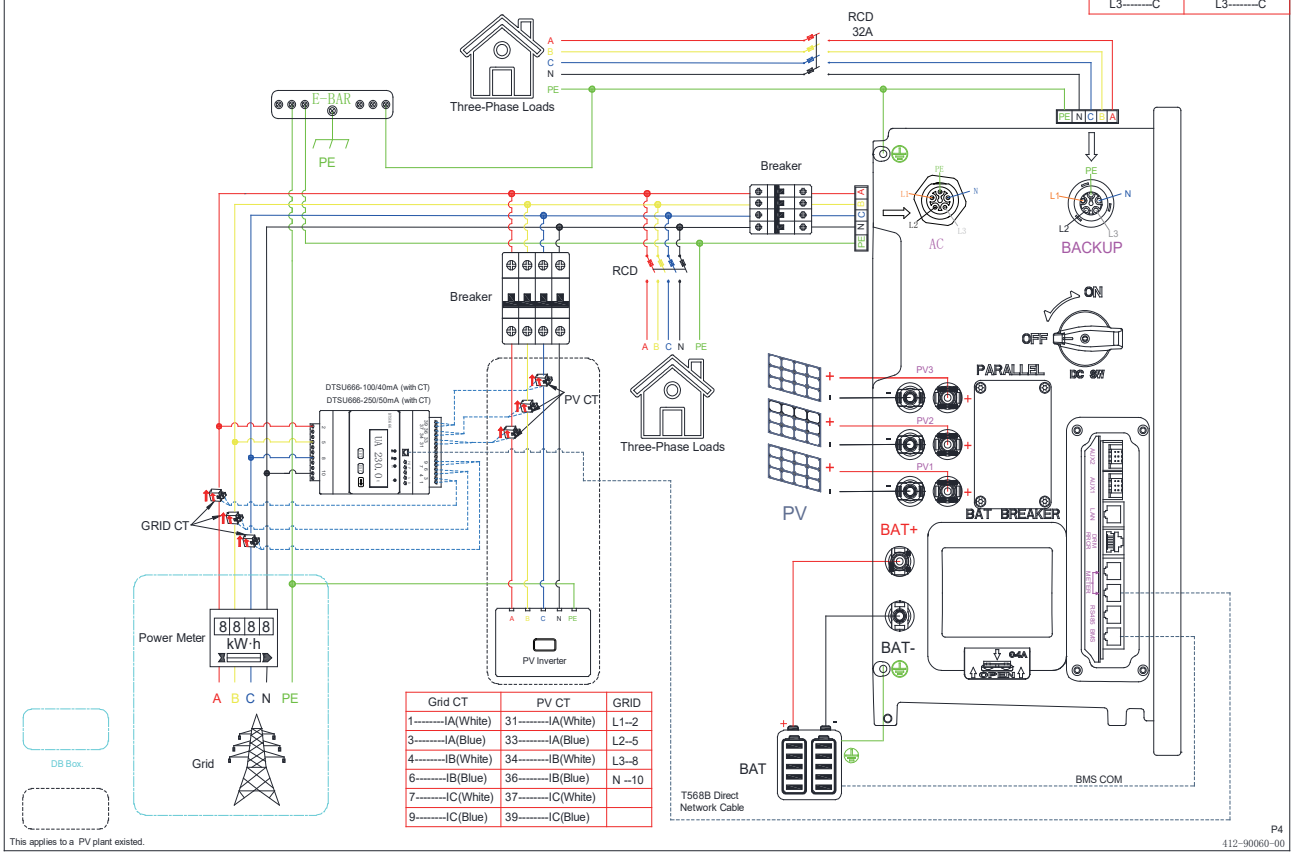

Grid CT	PV CT	GRID
1--------IA(White)	31--------IA(White)	L1--2
3--------IA(Blue)	33--------IA(Blue)	L2--5
4--------IB(White)	34--------IB(White)	L3--8
6--------IB(Blue)	36--------IB(Blue)	N --10
7--------IC(White)	37--------IC(White)	
9--------IC(Blue)	39--------IC(Blue)	

This applies to a PV plant existed.

P4

412-90060-00

1.Three-Phase Inverter System Wiring Diagram with Electricity Meter DTSU666 (Without CT)(EU)

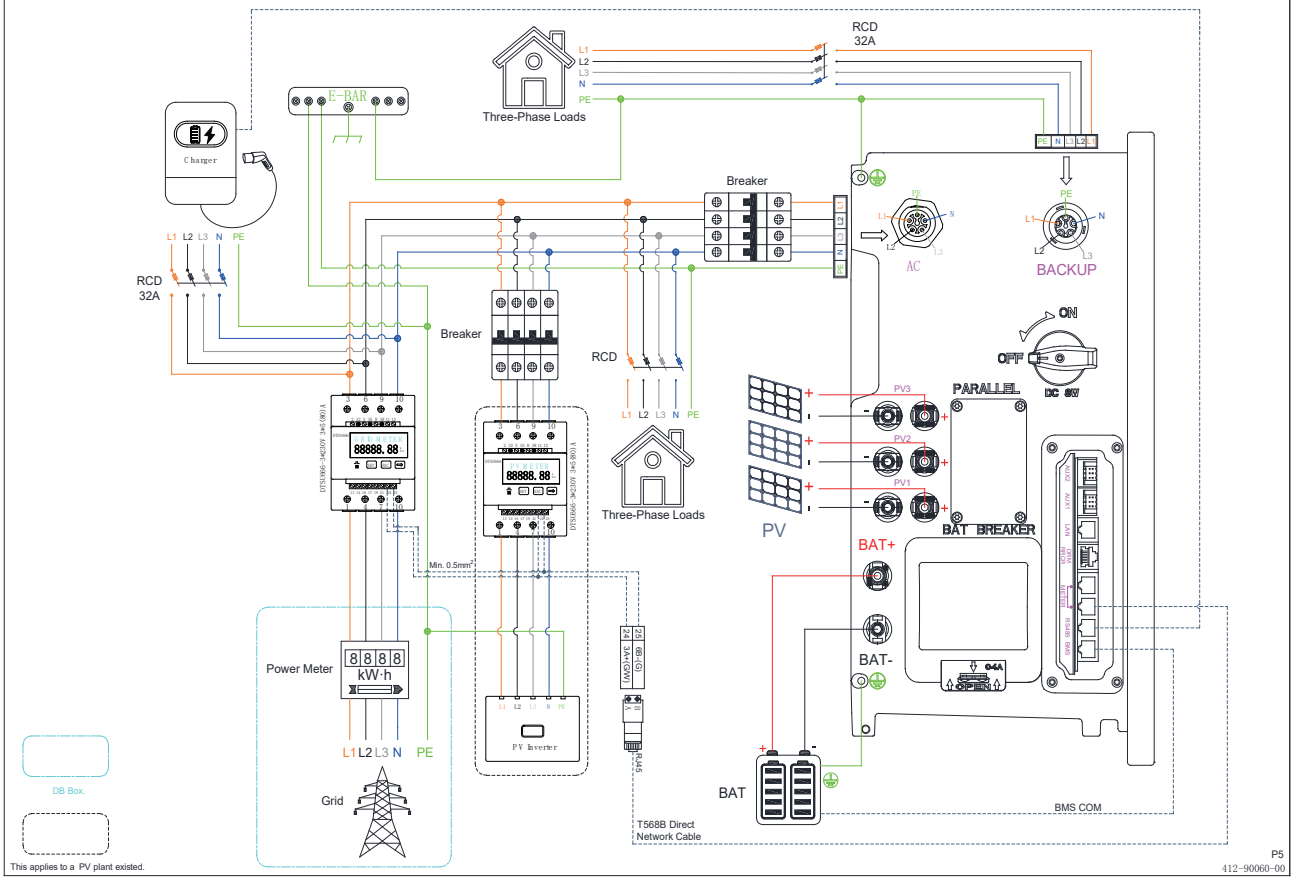

This applies to a PV plant existed.

P5

412-90060-00

2.Three-Phase Inverter System Wiring Diagram with Electricity Meter DTSU666 (With CT)(EU)

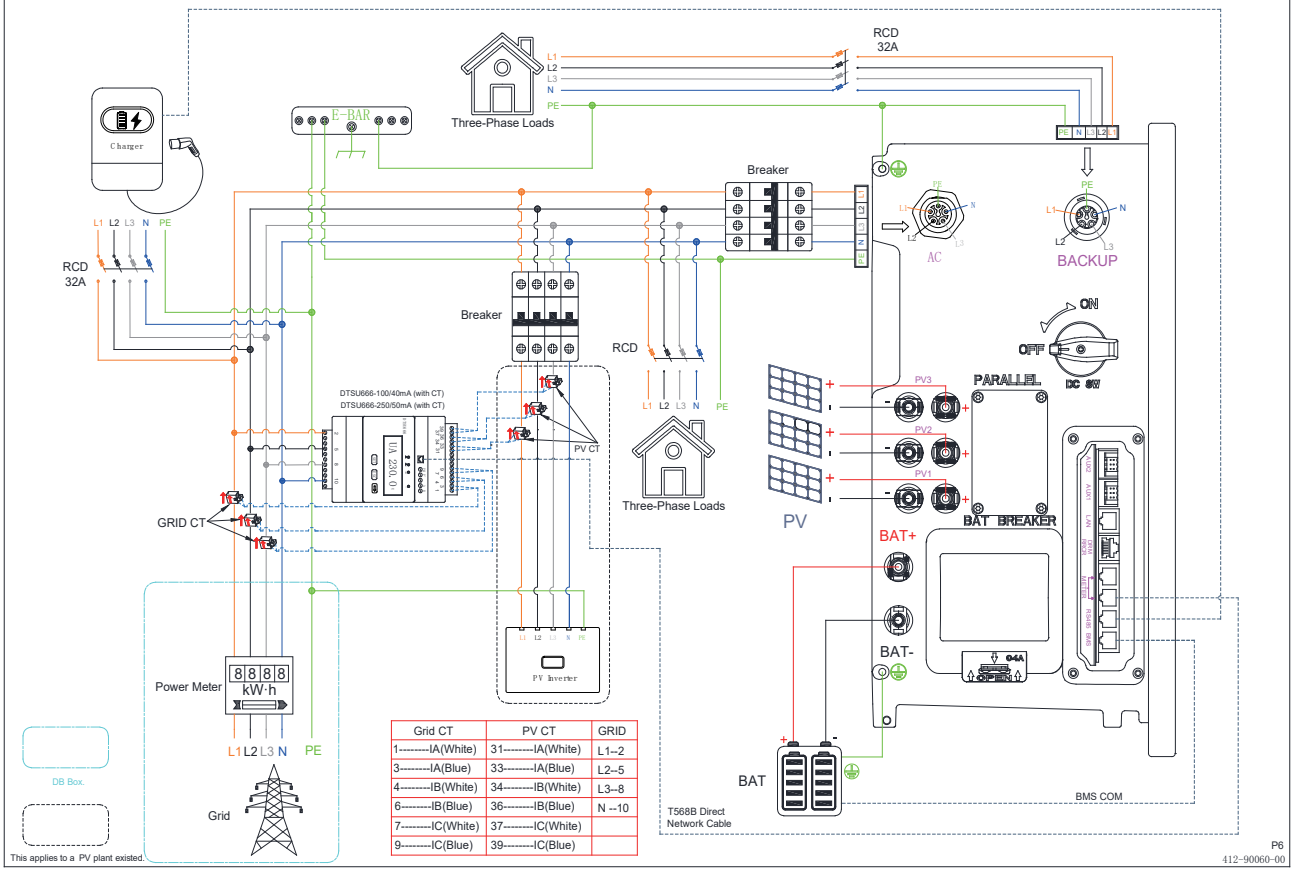

Grid CT	PV CT	GRID
1--------IA(White)	31--------IA(White)	L1--2
3--------IA(Blue)	33--------IA(Blue)	L2--5
4--------IB(White)	34--------IB(White)	L3--8
6--------IB(Blue)	36--------IB(Blue)	N --10
7--------IC(White)	37--------IC(White)	
9--------IC(Blue)	39--------IC(Blue)	

Three-Phase Inverter Parallel System Wiring Diagram(EU)

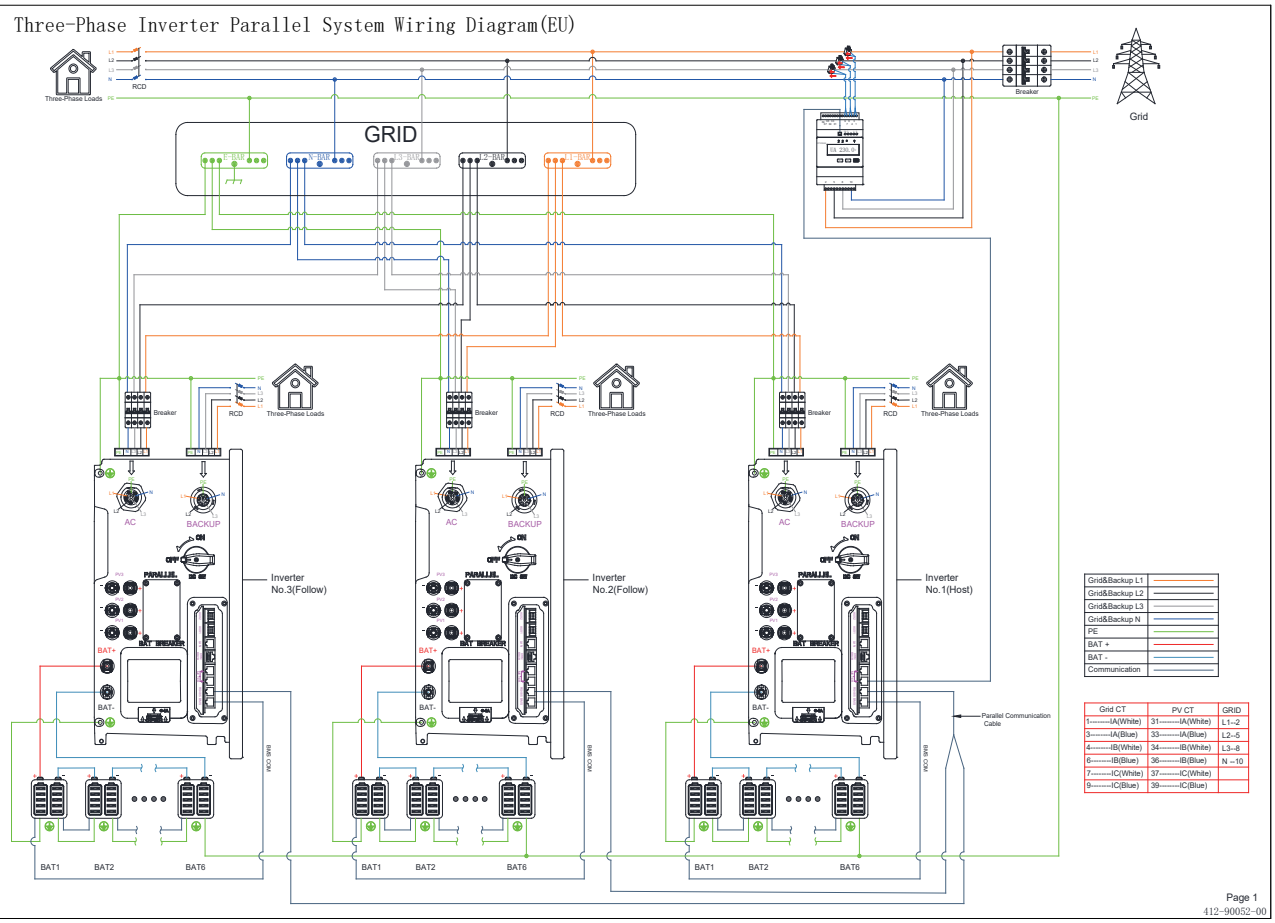

Grid CT	PV CT	GRID
1--------IA(White)	31--------IA(White)	L1--2
3--------IA(Blue)	33--------IA(Blue)	L2--5
4--------IB(White)	34--------IB(White)	L3--8
6--------IB(Blue)	36--------IB(Blue)	N --10
7--------IC(White)	37--------IC(White)	
9--------IC(Blue)	39--------IC(Blue)	

Appendix 2: Regional application standard

Please check with your local grid company and choose the correspond Regional Application Standard, the power quality modes Volt-var and Volt-Watt will be running automatically. (Only for regions with AS/NZS 4777.2 safety regulations).

Regional Application Standard	Electric Company
Australia A	N/A
Australia B	N/A
Australia C	N/A
New Zealand	N/A
Vector	New Zealand Vector

14 CONTACT US

Name: Shenzhen Zetara Power System Co., Ltd.
Https://www.zetarapower.eu
E-Mail: info@zetarapower.eu
Address: No.1101-1106, Building A,Union R&D Center, Longteng Community, Xixiang Street, Bao'an District, Shenzhen, 518102, P.R.China